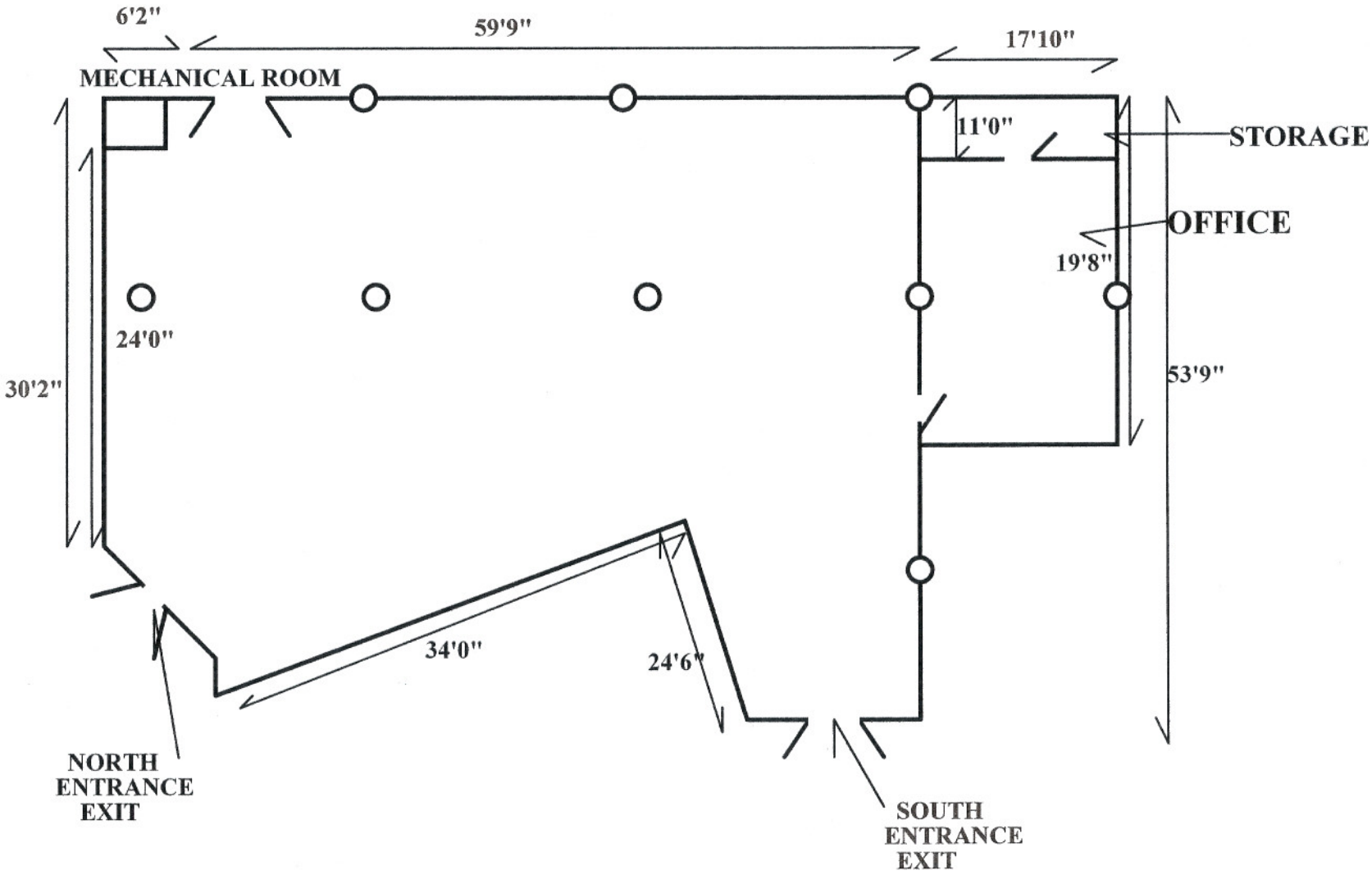

GALLERY AND GALLERY OFFICE