CONTRACT TRANSMITTAL RECORD

☐ **PERSONAL SERVICE** ☒ **PROFESSIONAL SERVICE**

CHANGE ORDER #

STANDARD PO # **2905960**

CONTRACT PO # **2905959**

TYPE OF CONTRACT: (Check One)
☒ CONSTRUCTION/DEMOLITION ☐ LEASE ☐ DEED
☐ PROFESSIONAL SERVICES
☐ PERSONAL SERVICES

DEPARTMENT HEAD'S SIGNATURE
RON BRUNDIDGE, DIRECTOR-DPW

DEPARTMENT
DPW / CITY ENGINEERING DIVISION

FUNDING SOURCE %
FEDERAL STATE **CITY 100% STREET FUND** OTHER

DEPARTMENT CONTACT PERSON
ADRIENNE D. SMITH

PHONE NO.
313-224-3950

REVISION

REVISION

CONTRACTOR'S NAME:
FORT WAYNE CONTRACTING, INC./AJAX PAVING INDUSTRIES, INC., A JOINT VENTURE

DATE PREPARED
4/30/15

CONTRACTOR'S ADDRESS:
320 EAST SEVEN MILE ROAD
DETROIT, MI 48203-2022

CHANGE ☐
CURRENT CONTRACT AMOUNT **$3,097,202.52**

PHONE NO. **313-368-3400, FAX: 313-368-3406**

☒ CORPORATION ☐ PARTNERSHIP ☐ INDIVIDUAL

FEDERAL EMPLOYER/SOCIAL SECURITY NUMBER: **45-0514373, 38-1383205**

MINORITY FIRM ☐ YES ☒ NO

PURPOSE OF CONTRACT: **PW-6971, HMA RESURFACING & MISC. CONSTRUCTION ON ALTER, MACK, E. SEVEN MILE ROAD & HARPER**

ACCOUNT STRING: **3301-193871-000048-632100-04189-000000-A4570**

TIME & DATE IN	APPROVER MUST ALSO MAKE APPROPRIATE NOTES IN ORACLE PURCHASE ORDER	TIME & DATE IN
	REQUESTING DEPARTMENT AUTHORIZED DEPARTMENT REPRESENTATIVE	5/4/15 5/12/15
MAY 12 2015	**BUDGET** ☒ RECOMMEND APPROVAL ☐ RECOMMEND DENIAL BUDGET DIRECTOR OR DEPUTY MAY 19 AM 10: 11	
	GRANT MANAGEMENT SECTION ☐ RECOMMEND APPROVAL ☐ RECOMMEND DENIAL GRANT ACCOUNTANT	
	LAW DEPARTMENT ☒ RECOMMEND APPROVAL ☐ RECOMMEND DENIAL CORPORATION COUNSEL	5/18/15
	PURCHASING DIVISION PURCHASING DIRECTOR	
	CITY COUNCIL APPROVAL JCC REFERENCE: PAGE _____ DATE JUN 09 2015	

RECEIVED
MAY 15 2015
Real Property Section
Law Department
City of Detroit

FRC APPROVAL
JUN 22 2015

Use Only One Set For Each Contract Package

EXECUTED CONTRACT

BOOK NO. _____

CPO NO. **2905959**

SPO NO. **2905960**

CITY OF DETROIT
MIKE DUGGAN, MAYOR

PROPOSAL:

HMA RESURFACING AND MISCELLANEOUS CONSTRUCTION ON ALTER BETWEEN CHANDLER PARK & E. JEFFERSON, MACK BETWEEN I-75 & RIOPELLE, E. SEVEN MILE ROAD BETWEEN I-75 & CONANT AND HARPER BETWEEN CADIEUX & I-94 CROSSOVER FOR THE DEPARTMENT OF PUBLIC WORKS

PW-6971

PREPARED BY:

CITY ENGINEERING DIVISION
DEPARTMENT OF PUBLIC WORKS
RICHARD T. DOHERTY, CITY ENGINEER

MARCH 2015

ACORD®

CERTIFICATE OF LIABILITY INSURANCE

DATE (MM/DD/YYYY): 4/22/2015

THIS CERTIFICATE IS ISSUED AS A MATTER OF INFORMATION ONLY AND CONFERS NO RIGHTS UPON THE CERTIFICATE HOLDER. THIS CERTIFICATE DOES NOT AFFIRMATIVELY OR NEGATIVELY AMEND, EXTEND OR ALTER THE COVERAGE AFFORDED BY THE POLICIES BELOW. THIS CERTIFICATE OF INSURANCE DOES NOT CONSTITUTE A CONTRACT BETWEEN THE ISSUING INSURER(S), AUTHORIZED REPRESENTATIVE OR PRODUCER, AND THE CERTIFICATE HOLDER.

IMPORTANT: If the certificate holder is an ADDITIONAL INSURED, the policy(ies) must be endorsed. If SUBROGATION IS WAIVED, subject to the terms and conditions of the policy, certain policies may require an endorsement. A statement on this certificate does not confer rights to the certificate holder in lieu of such endorsement(s).

PRODUCER
Guy Hurley Blaser and Heuer, LLC
1080 Kirts Blvd., Suite 500
Troy MI 48084

CONTACT NAME: Mary Ellen Krakauer
PHONE (A/C, No, Ext): (248) 519-1430 FAX (A/C, No): (248) 519-1401
E-MAIL ADDRESS: mkrakauer@ghbh.com

INSURER(S) AFFORDING COVERAGE	NAIC #
INSURER A: Amerisure Mutual Ins. Co. AX	23396
INSURER B:	
INSURER C:	
INSURER D:	
INSURER E:	
INSURER F:	

INSURED
Fort Wayne Contracting, Inc.
320 E. Seven Mile Road
Detroit MI 48203

COVERAGES CERTIFICATE NUMBER: 14-15 GL Master REVISION NUMBER:

THIS IS TO CERTIFY THAT THE POLICIES OF INSURANCE LISTED BELOW HAVE BEEN ISSUED TO THE INSURED NAMED ABOVE FOR THE POLICY PERIOD INDICATED. NOTWITHSTANDING ANY REQUIREMENT, TERM OR CONDITION OF ANY CONTRACT OR OTHER DOCUMENT WITH RESPECT TO WHICH THIS CERTIFICATE MAY BE ISSUED OR MAY PERTAIN, THE INSURANCE AFFORDED BY THE POLICIES DESCRIBED HEREIN IS SUBJECT TO ALL THE TERMS, EXCLUSIONS AND CONDITIONS OF SUCH POLICIES. LIMITS SHOWN MAY HAVE BEEN REDUCED BY PAID CLAIMS.

INSR LTR	TYPE OF INSURANCE	ADDL INSR	SUBR WVD	POLICY NUMBER	POLICY EFF (MM/DD/YYYY)	POLICY EXP (MM/DD/YYYY)	LIMITS	
A	GENERAL LIABILITY X COMMERCIAL GENERAL LIABILITY CLAIMS-MADE X OCCUR X CONTRACTUAL LIABILITY X XCU COVERAGE INCLUDED GEN'L AGGREGATE LIMIT APPLIES PER: POLICY X PRO-JECT LOC	X		2062046	5/28/2014	5/28/2015	EACH OCCURRENCE DAMAGE TO RENTED PREMISES (Ea occurrence) MED EXP (Any one person) PERSONAL & ADV INJURY GENERAL AGGREGATE PRODUCTS - COMP/OP AGG	$ 1,000,000 $ 1,000,000 $ 5,000 $ 1,000,000 $ 2,000,000 $ 2,000,000 $
A	AUTOMOBILE LIABILITY X ANY AUTO ALL OWNED AUTOS SCHEDULED AUTOS HIRED AUTOS NON-OWNED AUTOS			2062047	5/28/2014	5/28/2015	COMBINED SINGLE LIMIT (Ea accident) BODILY INJURY (Per person) BODILY INJURY (Per accident) PROPERTY DAMAGE (Per accident) PIP-Basic	$ 1,000,000 $ $ $ $
A	X UMBRELLA LIAB X OCCUR EXCESS LIAB CLAIMS-MADE DED X RETENTION $ 0			2062048	5/28/2014	5/28/2015	EACH OCCURRENCE AGGREGATE	$ 4,000,000 $ 4,000,000 $
A	WORKERS COMPENSATION AND EMPLOYERS' LIABILITY ANY PROPRIETOR/PARTNER/EXECUTIVE OFFICER/MEMBER EXCLUDED? Y/N (Mandatory in NH) If yes, describe under DESCRIPTION OF OPERATIONS below	N/A		WC2087627	5/28/2014	5/28/2015	X WC STATU-TORY LIMITS OTH-ER E.L. EACH ACCIDENT E.L. DISEASE - EA EMPLOYEE E.L. DISEASE - POLICY LIMIT	 $ 500,000 $ 500,000 $ 500,000

DESCRIPTION OF OPERATIONS / LOCATIONS / VEHICLES (Attach ACORD 101, Additional Remarks Schedule, if more space is required)
Project: PW6971. HMA Resurfacing & Miscellanious Construction City of Detroit is Additional Insured for General Liability when required by written contract. 30 Day Notice of Cancellation (Except Non-Payment of Premium) applies in favor of the City of Detroit for General Liability when required by written contract.

CERTIFICATE HOLDER

City of Detroit
Finance Department, Accounts Payable
1006 Coleman A. Young
Municipal Center
Detroit, MI 48226

CANCELLATION

SHOULD ANY OF THE ABOVE DESCRIBED POLICIES BE CANCELLED BEFORE THE EXPIRATION DATE THEREOF, NOTICE WILL BE DELIVERED IN ACCORDANCE WITH THE POLICY PROVISIONS.

AUTHORIZED REPRESENTATIVE
Paul Hurley/WEAL

© 1988-2010 ACORD CORPORATION. All rights reserved.
The ACORD name and logo are registered marks of ACORD

ACORD®

CERTIFICATE OF LIABILITY INSURANCE

DATE (MM/DD/YYYY): 5/8/2015

THIS CERTIFICATE IS ISSUED AS A MATTER OF INFORMATION ONLY AND CONFERS NO RIGHTS UPON THE CERTIFICATE HOLDER. THIS CERTIFICATE DOES NOT AFFIRMATIVELY OR NEGATIVELY AMEND, EXTEND OR ALTER THE COVERAGE AFFORDED BY THE POLICIES BELOW. THIS CERTIFICATE OF INSURANCE DOES NOT CONSTITUTE A CONTRACT BETWEEN THE ISSUING INSURER(S), AUTHORIZED REPRESENTATIVE OR PRODUCER, AND THE CERTIFICATE HOLDER.

IMPORTANT: If the certificate holder is an ADDITIONAL INSURED, the policy(ies) must be endorsed. If SUBROGATION IS WAIVED, subject to the terms and conditions of the policy, certain policies may require an endorsement. A statement on this certificate does not confer rights to the certificate holder in lieu of such endorsement(s).

PRODUCER
Guy Hurley Blaser and Heuer, LLC
1080 Kirts Blvd., Suite 500
Troy MI 48084

CONTACT NAME: Donna Griffiths
PHONE (A/C, No, Ext): (248) 519-1439 FAX (A/C, No): (248) 519-1401
E-MAIL ADDRESS: dgriffiths@ghbh.com

INSURER(S) AFFORDING COVERAGE	NAIC #
INSURER A: The Travelers Indemnity Co A+XV	25658
INSURER B: Houston Casualty Co. A+XIV	42374
INSURER C: ACIG Insurance Company AVIII	19984
INSURER D: Travelers Prop Cas Co. A+XV	25674
INSURER E:	
INSURER F:	

INSURED
Ajax Paving Industries, Inc.
830 Kirts Blvd., Suite 100
Troy MI 48084

COVERAGES **CERTIFICATE NUMBER:** 14-15 Master **REVISION NUMBER:**

THIS IS TO CERTIFY THAT THE POLICIES OF INSURANCE LISTED BELOW HAVE BEEN ISSUED TO THE INSURED NAMED ABOVE FOR THE POLICY PERIOD INDICATED. NOTWITHSTANDING ANY REQUIREMENT, TERM OR CONDITION OF ANY CONTRACT OR OTHER DOCUMENT WITH RESPECT TO WHICH THIS CERTIFICATE MAY BE ISSUED OR MAY PERTAIN, THE INSURANCE AFFORDED BY THE POLICIES DESCRIBED HEREIN IS SUBJECT TO ALL THE TERMS, EXCLUSIONS AND CONDITIONS OF SUCH POLICIES. LIMITS SHOWN MAY HAVE BEEN REDUCED BY PAID CLAIMS.

INSR LTR	TYPE OF INSURANCE	ADDL INSR	SUBR WVD	POLICY NUMBER	POLICY EFF (MM/DD/YYYY)	POLICY EXP (MM/DD/YYYY)	LIMITS	
A	GENERAL LIABILITY X COMMERCIAL GENERAL LIABILITY CLAIMS-MADE X OCCUR X XCU COVERAGE INCLUDED X CONTRACTUAL LIABILITY GEN'L AGGREGATE LIMIT APPLIES PER: POLICY X PRO-JECT LOC	X		CO-8A09732-9-IND-14	6/1/2014	6/1/2015	EACH OCCURRENCE	$ 1,000,000
							DAMAGE TO RENTED PREMISES (Ea occurrence)	$ 300,000
							MED EXP (Any one person)	$ 5,000
							PERSONAL & ADV INJURY	$ 1,000,000
							GENERAL AGGREGATE	$ 2,000,000
							PRODUCTS - COMP/OP AGG	$ 2,000,000
								$
A	AUTOMOBILE LIABILITY X ANY AUTO ALL OWNED AUTOS SCHEDULED AUTOS HIRED AUTOS NON-OWNED AUTOS			CAP-8A09733-0-IND-14	6/1/2014	6/1/2015	COMBINED SINGLE LIMIT (Ea accident)	$ 1,000,000
							BODILY INJURY (Per person)	$
							BODILY INJURY (Per accident)	$
							PROPERTY DAMAGE (Per accident)	$
							PIP-Basic	$
B	X UMBRELLA LIAB X OCCUR EXCESS LIAB CLAIMS-MADE DED RETENTION $			H143XC5013202	6/1/2014	6/1/2015	EACH OCCURRENCE	$ 5,000,000
							AGGREGATE	$ 5,000,000
								$
C	WORKERS COMPENSATION AND EMPLOYERS' LIABILITY ANY PROPRIETOR/PARTNER/EXECUTIVE OFFICER/MEMBER EXCLUDED? (Mandatory in NH) Y/N X If yes, describe under DESCRIPTION OF OPERATIONS below	N/A		WCA000004714	6/1/2014	6/1/2015	X WC STATU-TORY LIMITS OTH-ER	
							E.L. EACH ACCIDENT	$ 1,000,000
							E.L. DISEASE - EA EMPLOYEE	$ 1,000,000
							E.L. DISEASE - POLICY LIMIT	$ 1,000,000
D	INLAND MARINE			QT-630-8A099243-TIL-14	6/1/2014	6/1/2015	LEASED/RENTED EQUIP	$550,000

DESCRIPTION OF OPERATIONS / LOCATIONS / VEHICLES (Attach ACORD 101, Additional Remarks Schedule, if more space is required)
Project: PW6971. HMA Resurfacing & Miscellanious Construction. The City of Detroit is an Additional Insuredfor General Liability when required by written contract. 30 Day Notice of Cancellation (Except Non-Payment of Premium) applies in favor of the City of Detroit for General Liability when required by written contract.

CERTIFICATE HOLDER

City of Detroit
Finance Department, Accounts Payable
1006 Coleman A. Young
Municipal Center
Detroit, MI 48226

CANCELLATION

SHOULD ANY OF THE ABOVE DESCRIBED POLICIES BE CANCELLED BEFORE THE EXPIRATION DATE THEREOF, NOTICE WILL BE DELIVERED IN ACCORDANCE WITH THE POLICY PROVISIONS.

AUTHORIZED REPRESENTATIVE
Robert Heuer/WEAL Robert D. Heuer

© 1988-2010 ACORD CORPORATION. All rights reserved.
INS025 (201005) 01 The ACORD name and logo are registered marks of ACORD

Bond No. 013127148

PERFORMANCE BOND
(See Instructions on Reverse Side)

CONTRACT NO. **PW- 6971**
CPO NO: 2905959
SPO NO: 2905960

PRINCIPAL (Name, and legal status)
Fort Wayne Contracting, Inc/Ajax Paving Industries, Inc a joint venture

DATE OF CONTRACT

SURETY

DATE BOND EXECUTED

AMOUNT OF BOND (Express in words and figures)
THREE MILLION, NINETY SEVEN THOUSAND, TWO HUNDRED TWO AND 52/100 DOLLARS $3,097,202.52

KNOW ALL MEN BY THESE PRESENTS, That we, the PRINCIPAL and SURETY above named, are held and firmly bond unto the City of Detroit, Michigan, a municipal corporation, hereinafter called the City, in the amount stated above, for the payment of which sum well and truly to be made, we bind ourselves, our heirs, executors, administrators, and successors, jointly and severally, firmly by these presents.

THE CONDITION OF THIS OBLIGATION IS SUCH, that whereas the principal entered into a certain contract with the City, numbered and dated as shown above and hereto attached, and which shall be deemed a part hereof as fully as if set out herein.

AND WHEREAS, This bond is given in compliance with and subject to the provisions of Act No. 351 of the Public Acts of Michigan, for the year 1972, and the provisions of the City of Detroit Charter.

NOW, THEREFORE, if the principal shall well and truly perform and fulfill all the undertakings, covenants, terms, conditions, and agreements of said contract during the original term of said contract and any extensions thereof that may be granted by the City, with or without notice to the surety, and during the life of any guaranty required under the contract, and shall also well and truly perform and fulfill all the undertakings, covenants, terms, conditions, and agreements of any and all duly authorized modifications of said contract that may hereafter be made, notice of which modifications to the surety being hereby waived, then, this obligation to be void; otherwise to remain in full force and virtue.

IN WITNESS WHEREOF, the above-bounded parties have executed this instrument under their several seals on the date indicated above, the name and corporate seal of each corporate party being hereto affixed and these presents duly signed by its undersigned representative, pursuant to authority of its governing body.

PRINCIPAL: INDIVIDUAL DOING BUSINESS UNDER ASSUMED NAME PARTNERSHIP

NAMES OF ALL PARTNERS

BUSINESS ADDRESS:

IN PRESENCE OF: WITNESS

PRINCIPAL - INDIVIDUAL/PARTNER - SIGNATURE

1. _____ AS TO 1. _____ (L.S.)

2. _____ (5-74) AS TO 2. _____ (L.S.)

CORPORATE PRINCIPAL

STATE IN WHICH INCORPORATED Michigan	BUSINESS ADDRESS: **320 East Seven Mile Road** **Detroit, Michigan 48203-2022**	
EXECUTE CORPORATE CERTIFICATE ON REVERSE SIDE	OFFICER'S SIGNATURE TITLE Robert Farina Estimating Manager	AFFIX CORPORATE SEAL

CORPORATE SURETY

STATE IN WHICH INCORPORATED	BUSINESS ADDRESS: 5600 New King Street, Suite 360, Troy, MI 48098	
ATTEST: Holly Nichols	OFFICER'S SIGNATURE TITLE Michelle Buechel, Attorney-in-fact	AFFIX CORPORATE SEAL

Holly Nichols

C of D-171-BO (Rev. 5-74)

INSTRUCTIONS

1. This form shall be used wherever a Payment bond is required under the provisions of Act No. 351 of the Public Acts of Michigan for the year 1972, and the provisions of the City of Detroit Charter. There shall be no deviation from this form except as authorized by the Corporation Counsel of the City of Detroit.

2. The surety on the bond may be any corporation licensed by the State of Michigan to act as surety and satisfactory to the City of Detroit.

   The full business name of the corporation surety, business address, and the name of the state in which incorporated shall be inserted in the space provided therefor. The bond shall be executed and attested under corporate seal as indicated on the form.

3. The principal shall be identified by insetting in the space provided therefor the following information according to the principal's legal status, and the bond executed by the principal in accordance with the following requirements.

   Individual. The name including full Christian name, business or residence address, with the recital that the principal is an individual. The bond shall be signed by the individual on the line opposite the scroll seal (L.S.), using the same form of signature as used in the Contract, and the signature duly witnessed.

   Individual Doing Business Under an Assumed Name. The name of the individual, business or residence address; with the recital that the principal is doing business under an assumed or trade name, naming it. The bond shall be signed by the individual on the line opposite the scroll seal (L.S.), using the same form of signature as used in the Contract, and the signature duly witnessed.

   Co-partnership. The names of the individual partners, their business address, with the recital that such individuals are partners composing a firm, naming it. The bond shall be signed on line opposite the scroll seal by the same partner who signed the Contract, using the same form of signature, and the signature duly witnessed.

   Corporation. The full business name of the corporation, business address, with the recital that the principal is a corporation, and the name of the state in which incorporated. The bond shall be signed by an authorized officer of the corporation, followed by his title, and the corporate seal affixed.

   The official character and authority of the person executing the bond for the corporation shall be certified by the secretary or assistant secretary, according to the Certificate provided below. In lieu of such certificate there may be attached to the bond copies of so much of the records of the corporation as will show the official character and authority of the officer signing, duly certified by the secretary, under the corporate seal, to be true copies.

4. The date of this bond must not be prior to the date of instrument in connection with which it is given.

CERTIFICATE AS TO CORPORATE PRINCIPAL

I, _____, certify that I am the _____

Of the corporation named as principal within the bond; that _____,

Who signed the said bond on behalf of the principal, was then _____ of said corporation; that I know his signature, and his signature thereto is genuine; and that said bond was duly signed and the corporate seal affixed for and in behalf of said corporation by authority of it's governing body.

C of D-170-BO (Rev. 5-74)

Robert Farina
Estimating Manager

Bond No. 013127148

PAYMENT BOND
(See Instructions on Reverse Side)

CONTRACT NO. **PW- 6971**
CPO NO: 2905959
SPO NO: 2905960

PRINCIPAL (Name, and legal status)
Fort Wayne Contracting, Inc/Ajax Paving Industries, Inc a joint venture

DATE OF CONTRACT

SURETY
Liberty Mutual Insurance Company

DATE BOND EXECUTED

AMOUNT OF BOND (Express in words and figures)
Three million, Ninety seven thousand, Two hundred two and 52/100 Dollars $3,097,202.52

KNOW ALL MEN BY THESE PRESENTS, That we, the PRINCIPAL and SURETY above named, are held and firmly bond unto the City of Detroit, Michigan, a municipal corporation, hereinafter called the City, in the amount stated above, for the payment of which sum well and truly to be made, we bind ourselves, our heirs, executors, administrators, and successors, jointly and severally, firmly by these presents.

THE CONDITION OF THIS OBLIGATION IS SUCH, that whereas the principal entered into a certain contract with the City, numbered and dated as shown above and hereto attached, and which shall be deemed a part hereof as fully as if set out herein.

AND WHEREAS, This bond is given in compliance with and subject to the provisions of Act No. 351 of the Public Acts of Michigan, for the year 1972, and the provisions of the City of Detroit Charter.

NOW, THEREFORE, if the principal shall well and promptly make payment to all persons supplying labor and material in the prosecution pf the work provided for in said contract, and any and all duly authorized modifications of said contract that may hereafter be made, notice of which modifications to the surety being hereby waived, then this obligation to be void; otherwise to remain in full force and virtue.

IN WITNESS WHEREOF, the above-bounded parties have executed this instrument under their several seals on the date indicated above, the name and corporate seal of each corporate party being hereto affixed and these presents duly signed by its undersigned representative, pursuant to authority of its governing body.

PRINCIPAL: INDIVIDUAL DOING BUSINESS UNDER ASSUMED NAME PARTNERSHIP

NAMES OF ALL PARTNERS

BUSINESS ADDRESS:

IN PRESENCE OF WITNESS

PRINCIPAL - INDIVIDUAL/PARTNER – SIGNATURE

1. _____ AS TO 1. _____ (L.S.)

2. _____ (5-74) AS TO 2. _____ (L.S.)

CORPORATE PRINCIPAL

STATE IN WHICH INCORPORATED: Michigan

BUSINESS ADDRESS: **320 East Seven Mile Road Detroit, Michigan 48203-2022**

EXECUTE CORPORATE CERTIFICATE ON REVERSE SIDE

OFFICER'S SIGNATURE

TITLE Robert Farina
Estimating Manager

AFFIX CORPORATE SEAL

CORPORATE SURETY

STATE IN WHICH INCORPORATED: Massachusetts

BUSINESS ADDRESS: 5600 New King Street, Suite 360, Troy, MI 48098

ATTEST:

OFFICER'S SIGNATURE

TITLE Michelle Buechel, Attorney-in-fact

AFFIX CORPORATE SEAL

Holly Nichols

Holly Nichols

C of D-170-BO (Rev. 5-74)

INSTRUCTIONS

1. This form shall be used wherever a performance bond is required under the provisions of Act No. 351 of the Public Acts of Michigan for the year 1972, and the provisions of the City of Detroit Charter. There shall be no deviation from this form except as authorized by the Corporation Counsel of the City of Detroit.

2. The surety on the bond may be any corporation licensed by the State of Michigan to act as surety and satisfactory to the City of Detroit.

   The full business name of the corporation surety, business address, and the name of the state in which incorporated shall be inserted in the space provided therefor. The bond shall be executed and attested under corporate seal as indicated on the form.

3. The principal shall be identified by insetting in the space provided therefor the following information according to the principal's legal status, and the bond executed by the principal in accordance with the following requirements.

   Individual. The name including full Christian name, business or residence address, with the recital that the principal is an individual. The bond shall be signed by the individual on the line opposite the scroll seal (L.S.), using the same form of signature as used in the Contract, and the signature duly witnessed.

   Individual Doing Business Under an Assumed Name. The name of the individual, business or residence address; with the recital that the principal is doing business under an assumed or trade name, naming it. The bond shall be signed by the individual on the line opposite the scroll seal (L.S.), using the same form of signature as used in the Contract, and the signature duly witnessed.

   Co-partnership. The names of the individual partners, their business address, with the recital that such individuals are partners composing a firm, naming it. The bond shall be signed on line opposite the scroll seal by the same partner who signed the Contract, using the same form of signature, and the signature duly witnessed.

   Corporation. The full business name of the corporation, business address, with the recital that the principal is a corporation, and the name of the state in which incorporated. The bond shall be signed by an authorized officer of the corporation, followed by his title, and the corporate seal affixed.

   The official character and authority of the person executing the bond for the corporation shall be certified by the secretary or assistant secretary, according to the Certificate provided below. In lieu of such certificate there may be attached to the bond copies of so much of the records of the corporation as will show the official character and authority of the officer signing, duly certified by the secretary, under the corporate seal, to be true copies.

4. The date of this bond must not be prior to the date of instrument in connection with which it is given.

CERTIFICATE AS TO CORPORATE PRINCIPAL

I, _____, certify that I am the _____

Of the corporation named as principal within the bond; that _____,

Who signed the said bond on behalf of the principal, was then _____ of said corporation; that I know his signature, and his signature thereto is genuine; and that said bond was duly signed and the corporate seal affixed for and in behalf of said corporation by authority of it's governing body.

C of D-171-BO (Rev. 5-74)

Robert Farina
Estimating Manager

THIS POWER OF ATTORNEY IS NOT VALID UNLESS IT IS PRINTED ON RED BACKGROUND.
This Power of Attorney limits the acts of those named herein, and they have no authority to bind the Company except in the manner and to the extent herein stated.

Certificate No. 6611828

American Fire and Casualty Company
The Ohio Casualty Insurance Company
Liberty Mutual Insurance Company
West American Insurance Company

POWER OF ATTORNEY

KNOWN ALL PERSONS BY THESE PRESENTS: That American Fire & Casualty Company and The Ohio Casualty Insurance Company are corporations duly organized under the laws of the State of New Hampshire, that Liberty Mutual Insurance Company is a corporation duly organized under the laws of the State of Massachusetts, and West American Insurance Company is a corporation duly organized under the laws of the State of Indiana (herein collectively called the "Companies"), pursuant to and by authority herein set forth, does hereby name, constitute and appoint, Anne Barick; Holly Nichols; Michael D. Lechner; Michelle Buechel; Paul M. Hurley; Richard S. McGregor; Robert D. Heuer; T. R. Guy

all of the city of Troy, state of MI each individually if there be more than one named, its true and lawful attorney-in-fact to make, execute, seal, acknowledge and deliver, for and on its behalf as surety and as its act and deed, any and all undertakings, bonds, recognizances and other surety obligations, in pursuance of these presents and shall be as binding upon the Companies as if they have been duly signed by the president and attested by the secretary of the Companies in their own proper persons.

IN WITNESS WHEREOF, this Power of Attorney has been subscribed by an authorized officer or official of the Companies and the corporate seals of the Companies have been affixed thereto this 16th day of June, 2014.

American Fire and Casualty Company
The Ohio Casualty Insurance Company
Liberty Mutual Insurance Company
West American Insurance Company

By: David M. Carey
David M. Carey, Assistant Secretary

STATE OF PENNSYLVANIA ss
COUNTY OF MONTGOMERY

On this 16th day of June, 2014, before me personally appeared David M. Carey, who acknowledged himself to be the Assistant Secretary of American Fire and Casualty Company, Liberty Mutual Insurance Company, The Ohio Casualty Insurance Company, and West American Insurance Company, and that he, as such, being authorized so to do, execute the foregoing instrument for the purposes therein contained by signing on behalf of the corporations by himself as a duly authorized officer.

IN WITNESS WHEREOF, I have hereunto subscribed my name and affixed my notarial seal at Plymouth Meeting, Pennsylvania, on the day and year first above written.

COMMONWEALTH OF PENNSYLVANIA
Notarial Seal
Teresa Pastella, Notary Public
Plymouth Twp., Montgomery County
My Commission Expires March 28, 2017
Member, Pennsylvania Association of Notaries

By: Teresa Pastella
Teresa Pastella , Notary Public

This Power of Attorney is made and executed pursuant to and by authority of the following By-laws and Authorizations of American Fire and Casualty Company, The Ohio Casualty Insurance Company, Liberty Mutual Insurance Company, and West American Insurance Company which resolutions are now in full force and effect reading as follows:

ARTICLE IV – OFFICERS – Section 12. Power of Attorney. Any officer or other official of the Corporation authorized for that purpose in writing by the Chairman or the President, and subject to such limitation as the Chairman or the President may prescribe, shall appoint such attorneys-in-fact, as may be necessary to act in behalf of the Corporation to make, execute, seal, acknowledge and deliver as surety any and all undertakings, bonds, recognizances and other surety obligations. Such attorneys-in-fact, subject to the limitations set forth in their respective powers of attorney, shall have full power to bind the Corporation by their signature and execution of any such instruments and to attach thereto the seal of the Corporation. When so executed, such instruments shall be as binding as if signed by the President and attested to by the Secretary. Any power or authority granted to any representative or attorney-in-fact under the provisions of this article may be revoked at any time by the Board, the Chairman, the President or by the officer or officers granting such power or authority.

ARTICLE XIIi – Execution of Contracts – SECTION 5. Surety Bonds and Undertakings. Any officer of the Company authorized for that purpose in writing by the chairman or the president, and subject to such limitations as the chairman or the president may prescribe, shall appoint such attorneys-in-fact, as may be necessary to act in behalf of the Company to make, execute, seal, acknowledge and deliver as surety any and all undertakings, bonds, recognizances and other surety obligations. Such attorneys-in-fact subject to the limitations set forth in their respective powers of attorney, shall have full power to bind the Company by their signature and execution of any such instruments and to attach thereto the seal of the Company. When so executed such instruments shall be as binding as if signed by the president and attested by the secretary.

Certificate of Designation – The President of the Company, acting pursuant to the Bylaws of the Company, authorizes David M. Carey, Assistant Secretary to appoint such attorneys-in-fact as may be necessary to act on behalf of the Company to make, execute, seal, acknowledge and deliver as surety any and all undertakings, bonds, recognizances and other surety obligations.

Authorization – By unanimous consent of the Company's Board of Directors, the Company consents that facsimile or mechanically reproduced signature of any assistant secretary of the Company, wherever appearing upon a certified copy of any power of attorney issued by the Company in connection with surety bonds, shall be valid and binding upon the Company with the same force and effect as though manually affixed.

I, Gregory W. Davenport, the undersigned, Assistant Secretary, of American Fire and Casualty Company, The Ohio Casualty Insurance Company, Liberty Mutual Insurance Company, and West American Insurance Company do hereby certify that the original power of attorney of which the foregoing is a full, true and correct copy of the Power of Attorney executed by said Companies, is in full force and effect and has not been revoked.

IN TESTIMONY WHEREOF, I have hereunto set my hand and affixed the seals of said Companies this _____ day of _____, 20 15.

By: Gregory W. Davenport
Gregory W. Davenport, Assistant Secretary

Not valid for mortgage, note, loan, letter of credit, currency rate, interest rate or residual value guarantees.

To confirm the validity of this Power of Attorney call 1-610-832-8240 between 9:00 am and 4:30 pm EST on any business day.

BID BOND **City of Detroit** **Construction Contract**	Contract Number **PW- 6971** **CPO NO: 2905959** **SPO NO: 2905960**
Principal: Fort Wayne Contracting, Inc. / Ajax Paving Industries, Inc., Joint Venture	Date of Bid: April 9, 2015
Surety: Liberty Mutual Insurance Company	Date Bond Executed: April 9, 2015
Amount of Bond (express in words and figures): Five Percent of Accompanying Bid	5% of Bid

KNOW ALL MEN BY THESE PRESENTS:

WHEREAS, The Principal above named has submitted to the City of Detroit, Michigan, a municipal corporation, hereinafter called the City, a proposal or bid, dated as shown above, on the above numbered contract.

NOW THEREFORE, We the Principal and Surety, bind ourselves to the City in the amount of the bond stated above, that if the above proposal is accepted, the Principal will promptly enter into contract in accordance with the proposal, otherwise the Principal and/or Surety will pay the amount stated above unto the City of Detroit as liquidated damages.

SIGNED AND SEALED on the date indicated above.

In Presence of: Witness		Individual Principal
1. _____	as to	_____ (L.S.)
2. _____	as to	_____ (L.S.)
3. _____	as to	_____ (L.S.)
4. _____	as to	_____ (L.S.)

Attest Michael S. Podsiad	**Corporate Principal** Fort Wayne Contracting, Inc., / Ajax Paving Industries, Inc. Business Address: 380 E. Seven Mile Road, Detroit, MI 48203 By: [signature] Title: Christopher Hanore President Robert Farina Estimating Manager	AFFIX CORPORATE SEAL
Attest Holly Nichols Holly Nichols	**Corporate Surety** Liberty Mutual Insurance Company Business Address: 5600 New King Street, Suite 360, Troy, MI 48098 By: [signature] Title: Michelle Buechel, Attorney-in-fact	AFFIX CORPORATE SEAL

CERTIFICATE AS TO CORPORATE PRINCIPAL

I, Christopher B. Howe / JAMES A. Jacob, certify that

I am the President / Corp. Secretary / corporate secretary

Of the corporation named as principal in the within bond:

that Christopher Howe / Robert Farina, who signed the said bond

on behalf of the principal, was then President / Estimating Manager

of said corporation; that I know his signature, and his signature thereto is genuine; and that said bond was duly signed, sealed and attested for and in behalf of said corporation by authority of its governing body.

Christopher B. Howe (CORPORATE)

(SEAL)

James A. Jacob

Instructions

1. This form shall be used for construction work wherever a Bid Bond is required. There shall be no deviation from this form except as authorized by the Corporation Counsel of the City of Detroit.

2. The surety on the bond may be any corporation licensed by the State of Michigan to act as surety and satisfactory to the City of Detroit.

3. The name, including full Christian name, and business or residence address of each individual party to the bond shall be inserted in the space provided therefor, and each party shall sign the bond with his usual signature on the line opposite the scroll seal.

4. If the principals are partners, their individual names shall appear in the space provided therefor, with the recital that they are partners composing a firm, naming it, and all the members of the firm shall execute the bonds as individuals.

5. If the principal as well as the surety is a corporation, the name of the state in which each is incorporated shall be inserted in the spaces provided therefor, and said instrument shall be executed and attested under corporate seal for each as indicated on the form.

6. The official character and authority of the person or persons executing the bond for the principal, if a corporation, shall be certified by the secretary or assistant secretary, according to the form herein provided. In lieu of such certificate, there may be attached to the bond copies of so much of the records of the corporation as will show the official character and authority of the officer signing, duly certified by the secretary or assistant secretary under the corporate seal, to be true copies.

7. The date of this bond must not be prior to the date of instrument in connection with which it is given.

THIS POWER OF ATTORNEY IS NOT VALID UNLESS IT IS PRINTED ON RED BACKGROUND.
This Power of Attorney limits the acts of those named herein, and they have no authority to bind the Company except in the manner and to the extent herein stated.

Certificate No. 6611732

American Fire and Casualty Company
The Ohio Casualty Insurance Company
Liberty Mutual Insurance Company
West American Insurance Company

POWER OF ATTORNEY

KNOWN ALL PERSONS BY THESE PRESENTS: That American Fire & Casualty Company and The Ohio Casualty Insurance Company are corporations duly organized under the laws of the State of New Hampshire, that Liberty Mutual Insurance Company is a corporation duly organized under the laws of the State of Massachusetts, and West American Insurance Company is a corporation duly organized under the laws of the State of Indiana (herein collectively called the "Companies"), pursuant to and by authority herein set forth, does hereby name, constitute and appoint, Anne Barick; Holly Nichols; Michael D. Lechner; Michelle Buechel; Paul M. Hurley; Richard S. McGregor; Robert D. Heuer; T. R. Guy

all of the city of Troy, state of MI each individually if there be more than one named, its true and lawful attorney-in-fact to make, execute, seal, acknowledge and deliver, for and on its behalf as surety and as its act and deed, any and all undertakings, bonds, recognizances and other surety obligations, in pursuance of these presents and shall be as binding upon the Companies as if they have been duly signed by the president and attested by the secretary of the Companies in their own proper persons.

IN WITNESS WHEREOF, this Power of Attorney has been subscribed by an authorized officer or official of the Companies and the corporate seals of the Companies have been affixed thereto this 16th day of June, 2014.

American Fire and Casualty Company
The Ohio Casualty Insurance Company
Liberty Mutual Insurance Company
West American Insurance Company

By: David M. Carey, Assistant Secretary

STATE OF PENNSYLVANIA ss
COUNTY OF MONTGOMERY

On this 16th day of June, 2014, before me personally appeared David M. Carey, who acknowledged himself to be the Assistant Secretary of American Fire and Casualty Company, Liberty Mutual Insurance Company, The Ohio Casualty Insurance Company, and West American Insurance Company, and that he, as such, being authorized so to do, execute the foregoing instrument for the purposes therein contained by signing on behalf of the corporations by himself as a duly authorized officer.

IN WITNESS WHEREOF, I have hereunto subscribed my name and affixed my notarial seal at Plymouth Meeting, Pennsylvania, on the day and year first above written.

COMMONWEALTH OF PENNSYLVANIA
Notarial Seal
Teresa Pastella, Notary Public
Plymouth Twp., Montgomery County
My Commission Expires March 28, 2017
Member, Pennsylvania Association of Notaries

By: Teresa Pastella, Notary Public

This Power of Attorney is made and executed pursuant to and by authority of the following By-laws and Authorizations of American Fire and Casualty Company, The Ohio Casualty Insurance Company, Liberty Mutual Insurance Company, and West American Insurance Company which resolutions are now in full force and effect reading as follows:

ARTICLE IV – OFFICERS – Section 12. Power of Attorney. Any officer or other official of the Corporation authorized for that purpose in writing by the Chairman or the President, and subject to such limitation as the Chairman or the President may prescribe, shall appoint such attorneys-in-fact, as may be necessary to act in behalf of the Corporation to make, execute, seal, acknowledge and deliver as surety any and all undertakings, bonds, recognizances and other surety obligations. Such attorneys-in-fact, subject to the limitations set forth in their respective powers of attorney, shall have full power to bind the Corporation by their signature and execution of any such instruments and to attach thereto the seal of the Corporation. When so executed, such instruments shall be as binding as if signed by the President and attested to by the Secretary. Any power or authority granted to any representative or attorney-in-fact under the provisions of this article may be revoked at any time by the Board, the Chairman, the President or by the officer or officers granting such power or authority.

ARTICLE XIII – Execution of Contracts – SECTION 5. Surety Bonds and Undertakings. Any officer of the Company authorized for that purpose in writing by the chairman or the president, and subject to such limitations as the chairman or the president may prescribe, shall appoint such attorneys-in-fact, as may be necessary to act in behalf of the Company to make, execute, seal, acknowledge and deliver as surety any and all undertakings, bonds, recognizances and other surety obligations. Such attorneys-in-fact subject to the limitations set forth in their respective powers of attorney, shall have full power to bind the Company by their signature and execution of any such instruments and to attach thereto the seal of the Company. When so executed such instruments shall be as binding as if signed by the president and attested by the secretary.

Certificate of Designation – The President of the Company, acting pursuant to the Bylaws of the Company, authorizes David M. Carey, Assistant Secretary to appoint such attorneys-in-fact as may be necessary to act on behalf of the Company to make, execute, seal, acknowledge and deliver as surety any and all undertakings, bonds, recognizances and other surety obligations.

Authorization – By unanimous consent of the Company's Board of Directors, the Company consents that facsimile or mechanically reproduced signature of any assistant secretary of the Company, wherever appearing upon a certified copy of any power of attorney issued by the Company in connection with surety bonds, shall be valid and binding upon the Company with the same force and effect as though manually affixed.

I, Gregory W. Davenport, the undersigned, Assistant Secretary, of American Fire and Casualty Company, The Ohio Casualty Insurance Company, Liberty Mutual Insurance Company, and West American Insurance Company do hereby certify that the original power of attorney of which the foregoing is a full, true and correct copy of the Power of Attorney executed by said Companies, is in full force and effect and has not been revoked.

IN TESTIMONY WHEREOF, I have hereunto set my hand and affixed the seals of said Companies this 9th day of April, 20 15.

By: Gregory W. Davenport, Assistant Secretary

Not valid for mortgage, note, loan, letter of credit, currency rate, interest rate or residual value guarantees.

To confirm the validity of this Power of Attorney call 1-610-832-8240 between 9:00 am and 4:30 pm EST on any business day.

Prevailing Wage and Fringe Benefit Rates Required for City Projects Ordinance Contractor Certification

By signature in the space provided below, the Contractor acknowledges receipt of a copy of Ordinance No. 01-04, which is entitled Prevailing Wage and Fringe Benefit Rates Required for City Project and codified at Sections 18-5-60 through 18-5-69 of the 1984 Detroit City Code ("Ordinance"), a copy of which is attached to and made a part of this contract and affirms that it will comply with this Ordinance in all respects.

The Contractor affirms that prevailing wages, as established from time to time by the State of Michigan, shall be paid by the Contractor and all subcontractors under the terms of the Contract and for the duration of the Contract.

Company Name: Fort Wayne Contracting, Inc.

Authorized Signature: _____ Date: 4/8/15

Print Name: Christopher B. Howe

Title: President

CPO# 2905959

Prevailing Wage and Fringe Benefit Rates Required for City Projects Ordinance Contractor Certification

By signature in the space provided below, the Contractor acknowledges receipt of a copy of Ordinance No. 01-04, which is entitled Prevailing Wage and Fringe Benefit Rates Required for City Project and codified at Sections 18-5-60 through 18-5-69 of the 1984 Detroit City Code ("Ordinance"), a copy of which is attached to and made a part of this contract and affirms that it will comply with this Ordinance in all respects.

The Contractor affirms that prevailing wages, as established from time to time by the State of Michigan, shall be paid by the Contractor and all subcontractors under the terms of the Contract and for the duration of the Contract.

Company Name: Ajax Paving Industries, Inc.

Authorized Signature: Robert Farina Date: 4/8/15

Print Name: Robert Farina

Title: Estimating Manager

CPO# 2905959

SLAVERY ERA RECORDS AND INSURANCE DISCLOSURE ORDINANCE

CITY OF DETROIT

SLAVERY ERA RECORD AND INSURANCE DISCLOSURE AFFIDAVIT

1. Name of Contractor: Fort Wayne Contracting, Inc.

2. Address of Contractor: 320 E. Seven Mile Rd.
Detroit, MI 48203

3. Name of Predecessor Entities (if any): NA

4. Prior Affidavit submission? ____ No X Yes, on: 2/2/15 (Date of prior submission)

If "No", complete Items 5 and 6.
If "Yes", list date of prior submission above, go to Item 6 and execute this Affidavit.

5. ___ Contractor was established in _____ (year) and did not exist during the slavery era in the United States, is not a successor in interest to any entity that existed during such time, and therefore has no relevant records to search, or any pertinent information to disclose.

___ Contractor has searched their records and those of any predecessor entity, and has found no records that they or any predecessor(s) made any investments in, or derived profits from the slave industry or from slaveholder insurance policies.

___ Contractor has found records that they or their predecessor(s) made investments in, or derived profits from, the slave industry or slaveholder insurance policies. The nature of the investment, profits, or insurance policies, including the names of any slaves or slaveholders, is disclosed in the attached document(s).

6. I declare that the representations made in this Affidavit are accurate to the best of my knowledge and are based upon a diligent search of records in the Contractor's possession or knowledge. All documentation attached to this Affidavit reflects full disclosure of all records that are required to be disclosed to the City of Detroit. I also acknowledge that any failure to conduct a diligent search, or to make a full and complete disclosure, shall render this contract voidable by the City of Detroit.

Christopher R. Hanes (Printed Name) President (Title)

(Signature) 4/8/15 (Date)

Subscribed and sworn to before me this 8th day of April 2015
Patricia Hopkins
Notary Public, Macomb County, Michigan
My Commission expires: 2/18/2019

PATRICIA HOPKINS
Notary Public - Michigan
Macomb County
My Commission Expires Feb 18, 2019
Acting in the County of Lapeer

CPO:2905959

SLAVERY ERA RECORDS AND INSURANCE DISCLOSURE ORDINANCE

CITY OF DETROIT
SLAVERY ERA RECORD AND INSURANCE DISCLOSURE AFFIDAVIT

1. Name of Contractor: Ajax Paving Industries, Inc.

2. Address of Contractor: 830 Kirts Blvd, Ste 100
Troy, MI

3. Name of Predecessor Entities (if any): NA

4. Prior Affidavit submission? ____ No X Yes, on: 2/2/15
(Date of prior submission)

If "No", complete Items 5 and 6.
If "Yes", list date of prior submission above, go to Item 6 and execute this Affidavit.

5. ___ Contractor was established in _____ (year) and did not exist during the slavery era in the United States, is not a successor in interest to any entity that existed during such time, and therefore has no relevant records to search, or any pertinent information to disclose.

___ Contractor has searched their records and those of any predecessor entity, and has found no records that they or any predecessor(s) made any investments in, or derived profits from the slave industry or from slaveholder insurance policies.

___ Contractor has found records that they or their predecessor(s) made investments in, or derived profits from, the slave industry or slaveholder insurance policies. The nature of the investment, profits, or insurance policies, including the names of any slaves or slaveholders, is disclosed in the attached document(s).

6. I declare that the representations made in this Affidavit are accurate to the best of my knowledge and are based upon a diligent search of records in the Contractor's possession or knowledge. All documentation attached to this Affidavit reflects full disclosure of all records that are required to be disclosed to the City of Detroit. I also acknowledge that any failure to conduct a diligent search, or to make a full and complete disclosure, shall render this contract voidable by the City of Detroit.

Robert Faving (Printed Name) Estimating Manager (Title)

[signature] (Signature) 4/8/15 (Date)

Subscribed and sworn to before me this
8th day of April 2015
Judy Marie Filipiak
Notary Public, Macomb County, Michigan
My Commission expires: 11/31/2016

JUDY MARIE FILIPIAK
Notary Public, State of Michigan
County of Macomb
My Commission Expires Nov. 03, 2016
Acting in the County of Oakland

CPO:2905959

PW-6971 CPO# 2905959

Hiring Policy Compliance Affidavit

I, Christopher R. Moore, Being duly sworn, state that I am the President of Fort Wayne Contracting, of Fort Wayne Contracting, Inc. / Ajax Paving Industries, Inc, Joint Venture

Title Name of Bidder Corp or Other Business Entity

and that I have reviewed the hiring policies of this employer. I affirm that these policies are in compliance with the requirements of Article V, Division 6 of the Detroit City Code of 1984, being Sections 18-5-81 through 18-5-86 thereof. I further affirm that this employer will not inquire or consider the criminal convictions of applicants for employment needed to fulfill the terms of any City contract that may result from the competitive procedure in connection with which this affidavit is submitted, until such times as the employer interviews the applicant or determines that the applicant is qualified.

In support of this affidavit, **I attach a copy of the application form** that will be used to hire employees needed to fulfill the terms of any City contract that may result from the competitive procedure in connection with which this affidavit is submitted.

SIGNED,

Christopher R. Moore

Title: President of Fort Wayne Contracting, Inc **Date:** 4/8/15

STATE OF Michigan)
) SS
COUNTY OF Macomb)

The foregoing Affidavit was acknowledged before me the 8th day of April, 2015,
By Christopher R. Moore

Notary Public, County of: Macomb

Patricia Hopkins
Signature of Notary

State of: Michigan

My commission expires: 2/18/2019

PATRICIA HOPKINS
Notary Public - Michigan
Macomb County
My Commission Expires Feb 18, 2019
Acting in the County of Wayne

APPLICATION FOR EMPLOYMENT

We consider applications for all positions without regard to race, color, religion, creed, sex, national origin, disability, sexual orientation, citizenship status or any other legally protected status.

Position(s) Applied For | Date of Application

How Did You Learn About Us?

☐ Advertisement ☐ Relative ☐ Inquiry
☐ Employment Agency ☐ Friend ☐ Other _____

Last Name | First Name | Middle Name

Address *Number* *Street* *City* *State* *Zip Code*

Telephone Number(s) | Social Security Number (Voluntary)

Best time to contact you at home is: ____:____ AM PM

If you are under 18 years of age, can you provide required proof of your eligibility to work? ☐ Yes ☐ No

Have you ever filed an application with us before? ..... ☐ Yes ☐ No

If Yes, give date _____

Have you ever been employed with us before? ..... ☐ Yes ☐ No

If Yes, give date _____

Do any of your friends or relatives, other than spouse, work here? ..... ☐ Yes ☐ No

Are you currently employed? ..... ☐ Yes ☐ No

May we contact your present employer? ..... ☐ Yes ☐ No

Are you prevented from lawfully becoming employed in this country because of Visa or Immigration Status ..... ☐ Yes ☐ No

Proof of citizenship or immigration status will be required upon employment.

Date available for work ___/___/___ What is your desired salary range? _____

Are you available to work:
☐ Full-Time (please indicate 1 2 3 shift)
☐ Part-Time (please indicate Mornings Afternoon Evenings)
☐ Temporary (please indicate dates available ___/___/___ - ___/___/___)

Are you currently on "lay-off" status and subject to recall? ..... ☐ Yes ☐ No

Can you travel if a job requires it? ..... ☐ Yes ☐ No

A criminal record does not constitute an automatic bar to employment and will be considered only as it relates to the job in question.

WE ARE AN EQUAL OPPORTUNITY EMPLOYER

EMPLOYMENT EXPERIENCE

Start with your present or last job. Include any job-related military service assignments and volunteer activities. You may exclude organizations which indicate race, color, religion, gender, national origin, disabilities or other protected status.

1.

Employer		Dates Employed From	Dates Employed To	Work Performed
Address				
Telephone Number(s)		Hourly Rate/Salary Starting	Hourly Rate/Salary Final	
Job Title	Supervisor			
Reason for Leaving				

2.

Employer		Dates Employed From	Dates Employed To	Work Performed
Address				
Telephone Number(s)		Hourly Rate/Salary Starting	Hourly Rate/Salary Final	
Job Title	Supervisor			
Reason for Leaving				

3.

Employer		Dates Employed From	Dates Employed To	Work Performed
Address				
Telephone Number(s)		Hourly Rate/Salary Starting	Hourly Rate/Salary Final	
Job Title	Supervisor			
Reason for Leaving				

4.

Employer		Dates Employed From	Dates Employed To	Work Performed
Address				
Telephone Number(s)		Hourly Rate/Salary Starting	Hourly Rate/Salary Final	
Job Title	Supervisor			
Reason for Leaving				

If you need additional space, please continue on a separate sheet of paper.

List professional, trade, business or civic activities and offices held.

You may exclude membership which would reveal gender, race, religion, national origin, age, ancestry, disability or other protected status:

APPLICANT'S STATEMENT

I certify that answers given herein are true and complete.

I authorize investigation of all statements contained in this application for employment as may be necessary in arriving at an employment decision.

This application for employment shall be considered active for a period of time not to exceed 45 days. Any applicant wishing to be considered for employment beyond this time period should inquire as to whether or not applications are being accepted at that time.

I hereby understand and acknowledge that, unless otherwise defined by applicable law, any employment relationship with this organization is of an *"at will"* nature, which means that the Employee may resign at any time and the Employer may discharge Employee at any time with or without cause. It is further understood that this *"at will"* employment relationship may not be changed by any written document or by conduct unless such change is specifically acknowledged in writing by an authorized executive of this organization.

In the event of employment, I understand that false or misleading information given in my application or interview(s) may result in discharge. I understand, also, that I am required to abide by all rules and regulations of the employer.

_____ _____

Signature of Applicant Date

FOR PERSONNEL DEPARTMENT USE ONLY

Arrange Interview ☐ Yes ☐ No

Remarks _____

_____ _____

INTERVIEWER DATE

Employed ☐ Yes ☐ No Date of Employment _____

Job Title _____ Hourly Rate/ Salary _____ Department _____

By _____

NAME AND TITLE DATE

This Application For Employment is sold for general use throughout the United States. Amsterdam Printing and Litho assumes no responsibility for the use of said form or any questions which, when asked by the employer of the job applicant, may violate State and/or Federal Law.

CITY OF DETROIT
FINANCE DEPARTMENT
PURCHASING DIVISION

1008 COLEMAN A. YOUNG
MUNICIPAL CENTER
DETROIT, MICHIGAN 48226
PHONE 313 • 224 • 4600
FAX 313 • 224 • 4374

For Personal or Delivery Service delivery of quotations:

The Coleman A. Young Municipal Center has increased its security measures at all points of entry and exit to the building. Please allow ample time to pass through the security checkpoints to allow for the timely submission of your bid. A list of items **not** allowed in the building is listed below for your information. For delivery by a service or individual other than the bidder, it is the responsibility of the bidder to inform the service or individual of the City of Detroit's security policy.

NOTICE
COLEMAN A. YOUNG MUNICIPAL CENTER
PROHIBITED ITEMS

Listed below are items that are STRICTLY PROHIBITED in the Coleman A. Young Municipal Center. Your cooperation in this matter is appreciated. Your non-cooperation may result in items being confiscated and possible criminal prosecution under applicable statutes or ordinances.

METAL OR RATTAIL COMBS
All KNIVES, INCL. PEN KNIVES
BULLETS (or anything similar)
RAZORS OR RAZOR BLADES
SPIKES
SCREWDRIVERS, TOOLS, ETC.
GLASS BOTTLES
ALUMINUM CANS
KNIVES, FORKS, SPOONS
CAN OPENERS
NAILS, SCREWS, BOLTS
FINGERNAIL POLISH
CORDS
HEADPHONES WITH CORDS
MEASURING TAPES
PERFUME BOTTLES
CAMERAS
VIDEO CAMERAS
SYRINGES
NEEDLES OF ANY KIND
COIL/NECK/PULL CORDS ON KEY CHAINS
GLASS PICTURE FRAMES
BODY SPRAYS
CIGARETTE LIGHTERS
GUNS (incl. Models, replicas and/or toys)
TWEEZERS
BOX CUTTERS
BRASS KNUCKLES
MASTER LOCKS
MACE OR PEPPER SPRAY
SCISSORS
PC37/P38 CAN OPENERS
HAIR CLIPPERS
FLAT IRONS
NAIL FILES
MANICURE SETS/NAIL CLIPPERS
CURLING IRONS
HANDCUFFS
EXPLOSIVE OBJECTS/MATERIALS
HAIRSPRAY
TAPE RECORDERS
HAIRPICKS WITH NO TIPS
SPRAY CANS
LARGE HANGING KEY STRAPS
DENTAL FLOSS
MIRRORS OF ANY KIND
GLASS OF ANY KIND
WIRES/LOOSE BATTERIES

OTHER ITEMS DEEMED TO BE DANGEROUS BY SECURITY PERSONNEL WILL BE EXCLUDED AND CONFISCATED WHEN NECESSARY.

TABLE OF CONTENTS
PW-6971
SECTION I

DIVISION	PAGES
BULLETIN	
ADVERTISEMENT	AD.1 - AD.2
SPECIAL NOTICE TO BIDDERS	NB.1 - NB.21
STANDARD INSTRUCTIONS TO BIDDERS	SI.1 - SI.7
PROPOSAL	
PART I – BASE BID	P.1 - P.1d
PART II - CONDITIONS	P.2 - P.3
PART III – NAME, ADDRESS, LEGAL STATUS AND SIGNATURE OF BIDDER	P.4 - P.5
NON-COLLUSION AFFIDAVIT OF PRIME BIDDER	P.6
AGREEMENT	A.1 - A.4
BID BOND	BB.1 – BB.2
PERFORMANCE BOND	PB.1 – PB.2
PAYMENT BOND	PAB.1 – PAB.2
CONTRACT FORMS	
Equalization Requirements	
Equalization Eligibility Form	
Affidavit of Eligibility for Equalization Credit	
Prevailing Wage Ordinance and Contractor Certification	
Slavery Era Records & Insurance Disclosure Ordinance and Affidavit	
Executive Order 2007-1	
Hiring Policy & Compliance Affidavit	
Irrevocable Bank Letter of Credit	
Non- Collusion Affidavit of Subcontractor	
Human Rights Department Clearance-Covenant of Equal Opportunity	
Subcontractor Approval Form	
City Acknowledgment	
Corporate Acknowledgment	
Sole Proprietor Acknowledgment	
Corporation Certificate of Authority	
Certificate of Partnership Authority	
Certified Payroll	
Clearance Notification & Forms	
GENERAL CONDITIONS	GC.1 - GC.16
PREVAILING WAGE RATES	

TABLE OF CONTENTS
PW-6971
SECTION II

2012 Michigan Department of Transportation Standard Specifications for Construction

Michigan Manual of Uniform Traffic Control Devices, 2009 Edition

SECTION III

CONTRACT DRAWINGS AND SPECIAL PROVISIONS

BULLETIN NO. 1
MIKE DUGGAN, MAYOR
CITY OF DETROIT

5.0 MILES OF HMA RESURFACING AND MISCELLANEOUS CONSTRUCTION ON ALTER BETWEEN CHANDLER PARK & E. JEFFERSON MACK BETWEEN I-75 & RIOPELLE E. SEVEN MILE ROAD BETWEEN I-75 & CONANT AND HARPER BETWEEN CADIEUX & I-94 CROSSOVER FOR THE DEPARTMENT OF PUBLIC WORKS

PW-6971
CPO NO: 2905959
SPO NO: 2905960

MARCH 31, 2015

This Bulletin is hereby made a part of the Contract Documents of the above named City of Detroit contract for which bids will be received as advertised at the Finance Department, Purchasing Division, Room 1008, Coleman A. Young Municipal Center, Detroit, Michigan 48226 **until 2:00 P.M. Detroit time. Thursday April 9, 2015** and shall be taken into account in preparing the Proposal.

1. **UNIT PRICE SCHEDULE P.1a - P.d**

   Cadieux between Chandler Park & Morang has been eliminated from this project affecting the quantities for many of the pay items. Substitute and complete **pages P. 1a - P. 1d of the attached "Revised Unit Price Schedule"** when submitting the bid.

Ron Brundidge, Director
DEPARTMENT OF PUBLIC WORKS

****

This bulletin has been taken into account in preparing the proposal and is hereby made a part of the proposal submitted by:

Fort Wayne Contracting, Inc./Ajax Paving Industries, Inc./ Joint Venture
(Bidder's Name)

-President Fort Wayne Contracting, Inc.
(Signature) (Title)

NOTE: THIS BULLETIN MUST BE SIGNED BY THE BIDDER AND SUBMITTED WITH THE PROPOSAL TO HAVE A COMPLETE AND REGULAR BID.

CITY OF DETROIT
MIKE DUGGAN, MAYOR

ADVERTISEMENT TO BID
5.0 MILES OF HMA RESURFACING AND MISCELLANEOUS CONSTRUCTION ON ALTER BETWEEN CHANDLER PARK & E. JEFFERSON CADIEUX BETWEEN CHANDLER PARK & MORANG MACK BETWEEN I-75 & RIOPELLE E. SEVEN MILE ROAD BETWEEN I-75 & CONANT AND HARPER BETWEEN CADIEUX & I-94 CROSSOVER FOR THE DEPARTMENT OF PUBLIC WORKS

PW-6971
CPO NO: 2905959
SPO NO: 2905960

Sealed proposals will be received at the Finance Department, Purchasing Division, Room 1008, Coleman A. Young Municipal Center, Detroit, Michigan 48226 until 2:00 P.M. Detroit time, **Thursday April 9, 2015** and then at such place publicly opened for identification, but not read.

The bidding documents, which must be used in submitting a proposal, may be examined at the City Engineering Division of DPW, 2 Woodward Avenue, Room 642 Coleman A. Young Municipal Center, Detroit, Michigan 48226, during regular business hours, 8:00 A.M. - 4:00 P.M., and copies may be obtained upon payment of **$25.00. Payment is non-refundable.**

SCOPE OF WORK: The work consists of approximately 5.0 miles of cold milling HMA surface, HMA resurfacing, concrete curb, sidewalk, curb ramps, HMA approaches, drainage structure adjustments, pavement markings and other miscellaneous construction on Alter Between Chandler Park & E. Jefferson, Cadieux Between Chandler Park & Morang, Mack Between I-75 & Riopelle, E. Seven Mile Road Between I-75 & Conant and Harper Between Cadieux & I-94 Crossover in accordance with the 2012 Michigan Department of Transportation (MDOT) Standard Specifications for Construction and the 2009 Michigan Manual of Uniform Traffic Control Devices included by reference in the proposal. The improvements covered by this proposal are based on the August 28, 2008 Michigan Department of Transportation local agency guidelines for geometrics (3R) except where otherwise indicated in the proposal and Supplemental Specifications contained herein.

A Mandatory Pre-Bid Meeting to answer any questions relative to the work or contract documents will be held on Wednesday April 1, 2015 at 2:00 p.m. in the City Engineering Division's Conference Room, 2 Woodward Avenue, Room 611 Coleman A. Young Municipal Center, Detroit, Michigan 48226. Contractors are encouraged to be on time. As those arriving after the administrative portion of the meeting will not be allowed to sign in and deemed ineligible to bid. For additional information on the Pre-Bid Meeting, contact Ms. Adrienne D. Smith at 313-224-3950. For questions concerning the specifications or drawings, contact Mr. Noel Santos at 313-224-3822.

Bids are solicited only from qualified contractors regularly engaged in the required construction work and having adequate work experience to successfully complete work of the described size and scope. The successful low bidder must attain necessary clearances and provide bonds and insurance within 10 days of the bid date.

No proposal once submitted may be withdrawn for at least 120 days after the actual opening of the bids. The City of Detroit reserves the right to waive any irregularity in any bid, or to reject any or all bids should it be deemed in its best interest.

Each proposal must be accompanied by a certified check, bank draft, irrevocable bank letter of credit, or a satisfactory surety bond in an amount not less than 5% of the total bid price as a guarantee and security for the acceptance of the contract. Checks shall be made payable to the treasurer, City of Detroit. Bonds shall be issued by a guaranty or surety company licensed to do business in the State of Michigan.

In determining the low bidder, Detroit-based firms will be given an equalization percentage credit over non-Detroit firms in accordance with Ordinance 19-86.

Per **Executive Order No. 2007-1** worker hours on any construction project funded in whole or in part by city, state, or federal funds shall be performed by not less than 50% bona fide Detroit residents. Where possible, these percentages shall be applied on a craft-by-craft basis. For purposes of Executive Order No. 2007-1, worker hours shall include work performed by persons filling apprenticeship and on-the-job training positions.

The City of Detroit does not discriminate on the basis of handicap. This contract is financed by State of Michigan funds.

City of Detroit

Richard T. Doherty, City Engineer
City Engineering Division
Department of Public Works

Boysie Jackson, Chief Procurement Officer
Purchasing Division
Finance Department

Ron Brundidge, Director
Department of Public Works

SPECIAL NOTICE TO BIDDERS

1. GENERAL PURPOSE

The Special Notice to Bidders contains information and requirements applying specifically to this particular Contract. The Special Notice to Bidders supplements the Standard Instructions to Bidders and, in case of any discrepancy between the requirements in the former and latter, the provisions in the Special Notice to Bidders shall govern.

The published advertisement for the proposed Contract also contains information necessary to the bidders and is to be considered a part of the Special Notice to Bidders as if fully herein repeated.

2. DESCRIPTION OF WORK

The work consists, in general, of approximately 5.0 miles of cold milling HMA surface, HMA resurfacing, concrete curb, sidewalk, curb ramps, HMA approaches, drainage structure adjustments, pavement markings and other miscellaneous construction on Alter Between Chandler Park & E. Jefferson, Cadieux Between Chandler Park & Morang, Mack Between I-75 & Riopelle, E. Seven Mile Road Between I-75 & Conant and Harper Between Cadieux & I-94 Crossover.

3. BITUMINOUS MATERIAL PLANT

It is not necessary that the Contractor's plant be owned and operated by the successful bidder. However, it will be necessary that the materials be obtained from an existing plant which meets all Contract requirements. Further, any bidder not operating his own plant shall indicate in his Proposal the owner and the locations of the plants from which the bituminous materials will be obtained.

4. MATERIAL STORAGE YARDS

The City Zoning Ordinance provides for the restriction of material storage yards in certain residential areas. Bidders proposing to use such yards should satisfy themselves that the locations contemplated can be used, and if a permit is required, shall obtain such permit from the Buildings and Safety Engineering and Environmental Department and pay all costs in the connection therewith.

5. CONTRACT DOCUMENTS

The Contract Documents are composed of those individual parts as named by title in Article 2 of the Standard Instructions to Bidders.

Section I contains the Standard Contract Forms.

Section II consists 2012 Michigan Department of Transportation (MDOT) Standard Specifications for Construction and the 2009 Michigan Manual of Uniform Traffic Control Devices as amended by Bulletin.

Section III consists of separate drawings prepared by the City Engineering Division together with any other Detailed Specifications, Supplemental and Special Provisions included in these documents.

SPECIAL NOTICE TO BIDDERS

6. SPECIAL FORMS

Bidders will note that a copy of each of the following pages has been included:

Equalization Requirements, Eligibility Form and Affidavit of Eligibility
Prevailing Wage Ordinance & Affidavit
Slavery Era Records & Insurance Disclosure Ordinance and Affidavit
Hiring Compliance Policy & Affidavit
Proposal Signature Pages
Agreement Signature Page
Acknowledgment - City
Acknowledgment - Corporation
Acknowledgment - Sole Proprietorship or Partnership
Resolution of Corporate Authority
Certificate of Partnership Authority

Each set of the applicable documents is to be completed, signed, and returned with the proposal. These will later be used in preparing the executed Contract for the accepted bid.

7. HUMAN RIGHTS CLEARANCE

Attached is a copy of the Covenant of Equal Opportunity from the Human Rights Department of the City of Detroit. Both the low and the second bidder will be required to furnish the information, to the DPW-City Engineering Division for submission to the Human Rights Department, prior to award of the Contract.

A Human Rights review of employment goals may be required for each project, regardless of prior clearances.

8. CONTRACTOR AUTHORITY TO START WORK

The Contractor will have no authority to start work, no payments will be authorized by the Finance Department, and the City of Detroit will not be liable for reimbursement for any materials purchased or payment for any services rendered by the Contractor prior to the award of this Contract by resolution of the City Council and execution of this instrument by the Purchasing Director.

9. INDEPENDENT CONTRACTOR

The relationship of the Contractor to the City of Detroit is and shall continue to be that of an independent contractor, and no liability or benefits, such as workers' compensation, pension rights or liabilities, insurance rights or liabilities, or other provisions or liabilities arising out of or relating to a Contract for hire of employer/employee relationship shall arise or accrue to either party or either party's agent or employee with respect to the City of Detroit as a result of the performance of this Contract, unless expressly stated in this Contract.

10. WAIVER

The Contractor shall not hold the City liable for any personal injury incurred by any employee, agents, or consultants while working on this project which is not held in a court of competent jurisdiction to be directly attributable to the gross negligence of the City or any employee of the City acting within the scope of their employment and hereby agrees to hold the City harmless from any such claim by its employees, agents or consultants.

SPECIAL NOTICE TO BIDDERS

11. AUDIT

Nothing contained in this Contract shall be construed or permitted to operate as any restriction upon the power granted to the City Council by the City Charter to audit and allow all accounts chargeable against the City.

12. INDEMNITY AND DAMAGES

A. The Contractor agrees to save harmless the City against and from any and all liabilities, obligations, damages, penalties, claims, costs, charges, losses and expenses including without limitation, reasonable fees and expenses for attorneys (at the prevailing market rate for such legal services, expert witnesses and other consultants), which may be imposed upon, incurred by or asserted against the City by reason of any of the following occurring during the term of this Contract:

1. Any negligent or tortuous act, error or omission of the Contractor or any of its Associates for whose acts any of them might be liable, regardless of whether or not it is caused in part by a person indemnified hereunder.

2. Any failure by the Contractor or any of its Associates to perform its obligations, either expressed, or implied under this Contract.

The Contractor also agrees to hold the City harmless from any and all injury to the person or damage to the property of, or any loss or expense incurred by an employee of the City which arises out of or pursuant to the Contractor's performance, or that of its Associates under this Contract.

B. The Contractor undertakes and assumes all risk of dangerous conditions, if any, in and about any City premises and agrees to make an examination of all places where it will be performing the Services in order to determine whether such places are safe for the performance of the Services. The Contractor also agrees to waive and release any claim or liability against the City for personal injury or property damage sustained by it or its associates for personal injuries or property damage while performing under this Contract on premises which are not owned by the City.

C. In the event any action or proceeding shall be brought against the City by reason of any claim covered hereunder, the Contractor, upon notice from the City, will at its sole cost and expense, resist and defend the same with counsel of the Contractor's choice which is acceptable to the City.

D. The Contractor agrees that it is its responsibility and not the responsibility of the City to safeguard the property and materials that it or any of its Associates use or have in their possession while performing this Contract. Further, the Contractor agrees to hold the City harmless for any loss of such property and materials used by any such person pursuant to the Contractor's performance under this Contract or which is in their possession.

E. The indemnification obligation under this Article shall not be limited in any way by any limitation on the amount or type of damages, compensation, or benefits payable by or for the Contractor under Workers Compensation Acts or other employee benefit acts. In addition, the Contractor agrees to hold the City harmless from the payment of any deductible on any insurance policy.

SPECIAL NOTICE TO BIDDERS

12. INDEMNITY AND DAMAGES (Continued)

F. The Contractor agrees that this Article 12 Indemnity and Damages shall apply to all matters described in Article 12-A, Indemnity and Damages, (whether the matter is litigated or not) which occur or arise between the Contractor or its Associates, and the City, and agrees to save the City harmless there from as provided in this Article 12.

13. TERMINATION FOR CONVENIENCE

The City may terminate this Contract without cause at any time, without incurring any further liability whatsoever, other than as stated in this provision, by giving written notice to the Contractor of such termination, specifying the effective date thereof, at least fifteen (15) days prior to the effective date of such termination. If the Contract is terminated, the City will pay the Contractor only for the services rendered prior to termination, including any holdback. The amount of the payment shall be computed by the City on the basis of the services rendered, and such other means which, in the judgment of the City, represents a fair value of the services provided, less the amount of any previous payments made, which final payment the Contractor agrees shall constitute full and complete payment and satisfaction under this Contract. Should the City or the City's designee undertake any part of the services which are to be performed by the Contractor, to the extent such services are being performed by the City or its designee the Contractor shall not be entitled to any compensation for the services so performed. This section is subject to the maximum sum payable provision of this Contract.

14. RIGHTS, REMEDIES AND JURISDICTION

The rights and remedies set forth herein are not exclusive and are in addition to any of the rights and remedies provided by law or equity. All actions arising under this Contract shall be governed by, subject to, and construed according to the laws of the State of Michigan. The Contractor agrees, consents and submits to the personal jurisdiction of any competent court in Wayne County, Michigan, for any action brought against it arising out of this Contract. The Contractor agrees that service of process at the address and in the manner specified in this Contract will be sufficient to put the Contractor on notice. The Contractor also agrees that it will not commence any action against the City because of any matter whatsoever arising out of or relating to the validity, construction, interpretation and enforcement of this Contract, in any courts other than those in the County of Wayne, State of Michigan.

15. COMPARABLE OR EQUIVALENT TERMS

The Contractor warrants that all of the prices, terms, warranties, and benefits granted to the City herein are comparable to or better than the equivalent terms being offered by the Contractor to any present customer for like or similar services. In addition to the other remedies, which the City may invoke herein for the Contractor's breach, it may demand repayment of any overpayment plus interest.

16. BASIS OF PROPOSAL

The Proposal is on a unit price basis in accordance with Article 7E of the Standard Instructions to Bidders.

SPECIAL NOTICE TO BIDDERS

17. CITY OFFICER

The title and post office address of the officer named in the Agreement as acting on behalf of the City is:

Director - Department of Public Works
802 Coleman A. Young Municipal Center
Detroit, Michigan 48226

18. BOND REQUIREMENTS

The amount of the Performance and Payment Bonds required shall be as follows:

TYPE OF CONTRACT	PERFORMANCE BOND	PAYMENT BOND
City of Detroit financed contracts of $50,000 and under	25% of contract price	25% of contract price
City of Detroit financed contracts over $50,000 but under $1,000,000	50% of contract price	50% of contract price
All contracts over $1,000,000 or those financed by Federal funds	100% of contract price	100% of contract price

19. INSURANCE

The Contractor shall maintain, at its expense, during the term of this contract the following insurance:

TYPE	AMOUNT NOT LESS THAN
A. Worker's Compensation Insurance	Statutory limit
Employer's Liability Insurance	**$500,000** minimum each accident/each disease/disease each employee
B. Commercial General Liability Insurance (Coverage to include blanket contractual liability)	**$1,000,000** minimum combined single limit per occurrence **$2,000,000** minimum aggregate limit
C. Automobile Liability Insurance (covering all owned, hired and non-owned vehicles with personal and property protection insurance to comply with the provisions of the Michigan No-Fault Insurance Act, including residual liability insurance)	**$1,000,000** minimum combined single limit
D. Umbrella Excess Liability Insurance	**$4,000,000** minimum combined single limit per occurrence/aggregate

The commercial general liability insurance policy shall name as an additional insured: "The City of Detroit" and shall state that the Contractor's insurance is primary, as respect to the City of Detroit as an additional insured, and not excess over any insurance already carried by the City of Detroit.

The commercial general liability insurance shall provide blanket contractual liability insurance for all written contracts or in the alternative, shall contain a specific endorsement worded substantially as follows:

"During the effective period of the policies mentioned herein, it is agreed that this insurance specifically covers liability assumed by the insured under the provisions of **CPO No. 2905959** dated _____ entered into by the insured and the City of Detroit".

SPECIAL NOTICE TO BIDDERS

19. INSURANCE (Continued)

If the Commercial General Liability policy does not contain the standard ISO (Insurance Services Office) wording of "definition of insured" which reads essentially as follows: "The insurance afforded applies separately to each insured... except with respect to limits, then, in the alternative, the public liability insurance policy shall contain the following cross liability endorsement:

"It is agreed that the inclusion of more than one (1) insured under this policy shall not affect the rights of any insured as respects any claim, suit or judgment made or brought by or for any other insured or by or for any employee of any other insured. This policy shall protect each insured in the same manner as though a separate policy had been issued to each, except nothing herein shall operate to increase the insurer's liability beyond the amount or amounts for which the insurer would have been liable had only one (1) insured been named."

19.01 If during the term of this Contract changed conditions or other pertinent factors should in the reasonable judgment of the City render inadequate the insurance limits, the Contractor will furnish on demand such additional coverage or types of coverage as may reasonably be required under the circumstances. All such, insurance shall be effected at the Contractor's expense, under valid and enforceable policies, issued by insurers of recognized responsibility which are well-rated by national rating organizations and are acceptable to the city.

19.02 All policies shall name the Contractor as the insured except as otherwise stated and shall be accompanied by a commitment from the insurer that such policies shall not be canceled, or reduced without at least thirty (30) days' prior written notice to the City. Certificates of insurance evidencing such coverage shall be submitted to the **Finance Department, Accounts Payable Section, 1006 Coleman A. Young Municipal Center**, prior to the commencement of performance under this Contract and at least fifteen (15) days prior to the expiration dates of expiring policies.

19.03 If any work is sublet in connection with this Contract, the Contractor shall require each Subcontractor to effect and maintain the types and limits of insurance as requested by the City and shall require documentation of same, copies of which documentation shall be promptly furnished the City.

19.04 The Contractor shall be responsible for payment of all deductibles contained in any insurance required hereunder. The provisions requiring the Contractor to carry the insurance required under this Article shall not be construed in any manner as waiving or restricting the liability of the Contractor under this Contract.

19.05 The Commercial General Property Damage Insurance shall provide coverage for the so called "X"- explosion, "C" - collapse, and "U" - underground damage hazards or exposures.

Automobile Insurance covering all owned, non-owned or hired automobiles, with a minimum **$1,000,000** combined single limit for Bodily Injury and/or Property Damage for each accident. Such insurance shall comply with the provisions of the Michigan No-Fault Insurance Law, and shall provide coverage for personal protection insurance, property protection insurance, and residual liability insurance, and shall name the City of Detroit as an additional insured.

Fire Insurance - Not Required.

19.06 The Contractor shall hold the City harmless for payment of any deductibles required pursuant to any such policies.

SPECIAL NOTICE TO BIDDERS

20A. TIME OF STARTING AND COMPLETING WORK

The stipulated time for fully completing the entire work has taken into account, and an allowance made for, the time normally required for a "punch list" and final cleanup, and also for inclement weather during the months in which work will be in progress. It also includes an allowance for the concrete curing period.

The Contractor shall schedule the various operations so that each contract may be fully completed within the time allowed. Completion of the application of the resurfacing materials themselves will not be considered in compliance with the Contract provisions requiring full completion within the time stipulated.

A. Single Contract: A bidder who has been awarded only a single pavement resurfacing contract, shall begin his operations at the site of the work on the date ordered in the written notice of the Engineer, and shall fully complete the entire work thereunder within **75 calendar days** after the issuance of the start work notice in accordance with the provisions of Article 3 of the Agreement. **The contract will terminate on December 31, 2017.**

B. Multiple Contracts: A bidder who currently has two or more awarded pavement resurfacing contracts on which work has not been started, may be permitted to start work on such contracts on dates selected by him provided that such dates are first submitted to and approved in writing by the Engineer. The City, however, through the Engineer, may order the starting of any particular Contract or Contracts on specific dates when, in the judgement of the Engineer, so doing is in the best interest of the City.

The contractor's request for approval of a selected date for start of work on a specific contract shall be on forms provided by the City and shall be submitted to the Engineer at least three working days, exclusive of Saturday and Sunday, prior to the selected date.

When a selected date has been approved by the Engineer, the contractor will be expected to start work on such date and the time allowed for date, unless a revised request is submitted to and approved by the Engineer. A revised request will, ordinarily, be favorably considered and approved only when the contractor's other Detroit pavement resurfacing work makes the previously selected and approved date impractical or impossible.

The time of starting and completing work on multiple pavement resurfacing contracts shall be predicated on:

1. Construction operations being carried on at a rate of progress to ensure completion within the stipulated time allowed for completion.

2. Construction operations being carried on without unnecessary delays and no phase of the work on other contracts to be started to the prejudice of the same phase on a contract previously started.

3. The work on all contracts being fully completed by not later than **November 1st** of the current calendar year. Carry over work, if permitted, to the following calendar year construction season shall be at no change in contract proposal unit prices.

20A. TIME OF STARTING AND COMPLETING WORK (Continued)

C. Single Contract - Containing Multiple Streets

A bidder who has been awarded a single contract containing multiple streets, may be permitted to start work on such streets on dates selected by him, provided that such dates are first submitted to and approved in writing by the Engineer.

A bidder who has been awarded a single contract containing multiple streets, may be permitted to start work on such streets on dates selected by him, provided that such dates are first submitted to and approved in writing by the Engineer.

The City, however, through the Engineer, may order the starting of work on any particular street or streets on specific dates when, in the judgement of the Engineer, so doing is in the best interest of the City.

The contractor's request for approval of a selected date for start of work on a specific street shall be on forms provided by the City and shall be submitted to the Engineer at least three working days, exclusive of Saturday and Sunday, prior to the selected date.

When a selected date has been approved by the Engineer, the contractor will be expected to start work on such date and the time allowed for fully completing the work on each specific street will be computed from and include such date, unless a revised request is submitted to and approved by the Engineer. A revised request will, ordinarily, be favorably considered and approved only when the contractor's other Detroit pavement resurfacing work makes the previously selected and approved date impractical or impossible.

The time of starting and completing work on multiple street resurfacing contracts shall be predicated on:

1. Construction operations being carried on at a rate of progress to ensure completion within the stipulated time allowed for completion.
2. Construction operations being carried on without unnecessary delays and no phase of the work on other streets to be started to the prejudice of the same phase on a street previously started.
3. There being no unnecessary delay between the completion of one street and the starting of the next.
4. The work on all contracts being fully completed by not later than November 1st of the current calendar year. Carry over work, if permitted, to the following calendar year construction season shall be at no charge in contract proposal unit prices.

It is contemplated that all work will be completed during the **2015** paving season. However, if for any reason, beyond the control of the City or the Contractor, this cannot be accomplished, the schedule of operations in the **Fall of 2015** shall be such that:

1. No concrete paving slabs are poured after November 1; and
2. No excavation of any paving area shall be started for which the pouring of the concrete slab cannot be completed on or before November 1.

20A. TIME OF STARTING AND COMPLETING WORK (Continued)

C. Single Contract - Containing Multiple Streets (Continued)

When no further work can be done in the **Fall of 2015**, the remaining work shall, thereupon, be suspended on date stipulated in a written order of the City Engineer until suitable weather in the **Spring of 2016.**

Work shall be resumed in the **Spring of 2016** on a date ordered or approved in writing by the City Engineer and shall, thereafter, be fully completed within the number of calendar days remaining from the stipulated total of 75 days.

Whenever work is not completed within a given construction season and is scheduled to resume the following construction season(s), as described above, or whenever work cannot commence due to seasonal limitations and starting is delayed to a subsequent construction season(s), such starting delay and/or carry over to the following year(s) shall be done at no additional cost to the City of Detroit.

The unit prices or contract bid price shall remain firm and will not be changed due to the above reasons.

The Contractor shall prepare his bid taking the above detailed requirements into consideration.

20B. OTHER CONTRACTS

The work under this Contract is required to be coordinated with that of other contracts at the site. The bidder to whom this Contract is awarded shall fully cooperate with the other Contractors in such a manner as the Engineer may direct, so that the work on the entire project may be performed without delay or interference. The bidder shall take these requirements into consideration in preparing his proposal and arriving at his bid price, as no claim for additional costs or damages will be allowed for alleged interference or delay of his work by others.

21. ALLEY CLOSINGS

Prior to the temporary closing of any alley for construction purposes, the City must properly notify residents of the adjacent property, and alternate arrangements made for trash pick-up when required.

After issuance of a Start of Work Notice by the City, the Contractor shall submit for review by the City the proposed schedule of any work that would require the closing of such an alley. No construction necessitating the temporary closing of an alley shall begin without specific authorization by the City.

22. LIQUIDATED DAMAGES

The amount liquidating the damages referred to in Article 4 of the Agreement shall be assessed in accordance with Section 108.10.C entitled "Assessment of Liquidated Damages" of the 2012 MDOT Specifications for Construction

SPECIAL NOTICE TO BIDDERS

23. CONTRACT PAYMENTS

The City will make progress and final payments in accordance with the provisions of Articles 7 and 8 of the Agreement. Progress payments will include an allowance for materials stored at the site.

Contract payments are contingent upon receipt of grant funds. The City of Detroit reserves the right to delay payments until receipt of adequate funds from the grantor agency.

24. FEDERAL REGULATIONS

The Contractor shall fully comply with all requirements of the Federal Provisions as contained in the General Conditions - Part II, and the Affirmative Action Requirements contained in the General Conditions Part III.

25. INFORMATION TO BE SUBMITTED WITH BID

The Proposal requires certain information in addition to the price bid, to be furnished by the bidder and submitted as part of his proposal. The bidder is directed to Article 8D of the Standard Instructions to Bidders for general instructions as how such information is to be submitted.

The bidder is cautioned that any information, in whatever form submitted with his bid, which in any way modifies or changes the stipulated Contract Provisions may cause the rejection of the proposal. A bid will become conditional and unacceptable should a bidder include with his proposal, either intentionally or inadvertently, standard brochures, sales agreements, etc., containing contractual provisions differing substantially from those set forth in Contract Documents, unless the bidder definitely and positively indicates that such provisions are not part of his proposal.

26. CHANGES TO STANDARD CONTRACT DOCUMENTS

The following changes are hereby made and supersede standard provisions of the Contract Documents:

A. Standard Instructions to Bidders
Article 16 - "Bond Requirements"

Delete the third paragraph of this article, and substitute therefore the following:

"The surety company or companies shall be listed in the latest issue of U. S. Treasury Form 570 and shall be licensed to do business in the State of Michigan as evidenced by a copy of the 'Certificate of Authority", issued by the Michigan State Department of Insurance filed with the Director. Should any surety upon the Contract be deemed unsatisfactory at any time to the City, notice will be given to the Contractor to that effect by the City, and the Contractor shall forthwith substitute a new surety or sureties satisfactory to the City and without any additional cost to the City."

B. General Conditions

1. Whenever Engineer is referred to, this shall be changed to read, "City Engineer, City Engineering Division - DPW".

2. Delete the second paragraph of Article 28, and substitute therefore the following:

26. CHANGES TO STANDARD CONTRACT DOCUMENTS (Continued)

"The Contractor shall submit, with the Bid, a separate written request to the City Engineering Division - DPW for approval of each Proposed Subcontractor. Each request shall be on the forms provided by the City Engineering Division - DPW and shall give the name and address of the proposed Subcontractor, the portion and the approximate cost of the work to be sublet. Upon request of the City Engineering Division - DPW, the Contractor who is the apparent Low Bidder shall promptly furnish such additional information tending to establish that the Proposed Subcontractor has the necessary facilities, skill, integrity, part experience, and financial resources to perform the work in accordance with the terms and conditions of this Contract."

3. "No portion of the work may be sublet without the prior written approval of the City. In no case, however, will the Contractor be permitted to sublet any concrete street or alley paving. Concrete paving for the purpose of this condition shall be defined as follows: street and alley pavements with or without curbs, separate type curbs, integral curb and sidewalk, driveways, sidewalks, sidewalk ramps, parking lot pavements and minor pavement work if approved by the Engineer."

"Subcontracting of pavement items, other than streets and alleys, may be permitted after a review of the proposed Subcontractor and the scope of work to be sublet has been made by the City Engineering Division - DPW. The Contractor shall submit the necessary Subcontractor approval request forms, insurance certificates, and such other affidavits as may be required by the contract prior to the review by the City Engineering Division - DPW. Approval of any Subcontractor shall not relieve the prime Contractor of any responsibilities, duties, and/or liabilities as defined in other sections of this Contract. The bidder is particularly reminded that the prime Contractor is required to provide a competent superintendent or general foreman at the site of the work at all times work is in progress on the Contract. Such individual shall have full authority to act for the Contractor."

"Whenever possible, subcontracts shall be let to Detroit companies. Subcontractors must agree to do their work in Detroit, and to use Detroit labor where practicable to give the kind of work specified."

"The Testing Laboratory required to test both the HMA and concrete mixes , in accordance with MDOT HMA & concrete material acceptance provision is considered a Subcontractor. Consequently, the selected laboratory shall be submitted for approval in the manner prescribed in Article 28, "Subcontracts", of the General Conditions. However, only one request for approval need to be made when the same laboratory will be used on all paving contracts awarded to the bidder. The insurance required to be carried by the laboratory shall be not less than that specified for the Contractor." All materials and workmanship shall be in accordance with the 2012 Michigan Department of Transportation (MDOT) Standard Specifications for Construction.

Article 36 - "FAIR EMPLOYMENT PRACTICES"

Delete this Article in its entirety and substitute the following:

SPECIAL NOTICE TO BIDDERS

26. CHANGES TO STANDARD CONTRACT DOCUMENTS (Continued)

Article 36 - "FAIR EMPLOYMENT PRACTICES" (Continued)

A. In accordance with the United States Constitution and all federal legislation and regulations governing fair employment practices and equal employment opportunity, including but not limited to Title VII of the Civil Rights Act of 1964 (P.L. 88-352, 78 STAT. 252), and the United States Department of Justice Regulations (28 C.F.R. Part 42) issued pursuant to the Title and in accordance with the Michigan Constitution and all state laws and regulations governing fair employment practices and equal employment opportunity, including but not limited to the Michigan Civil Rights Act P.A. 1976 No. 453 and the Michigan Handicappers Civil Rights Act (P.A. 1976 No. 220), the Contractor agrees that he will not discriminate against any person, employee, consultant or applicant for employment with respect to his/her hire, tenure, terms, conditions or privileges of employment or hire because of his/her religion, race, color, national origin, age, sex, height, weight, marital status, or handicap that is unrelated to the individuals ability to perform the duties of a particular job or position. The Contractor recognizes the right of the United States and the State of Michigan to seek judicial enforcement of the foregoing covenants against discrimination against itself or its subcontractors.

B. The Contractor agrees to comply with Chapter 2, Article 7, Ordinance No. 303-H as amended by Ordinance No. 330-H of the Detroit City Code, and those rules and procedures adopted by the Human Rights Department pursuant thereto.

The Contractor shall not discriminate against any employee or applicant for employment, training, education, or apprenticeship connected directly or indirectly with the performance of this Contract, with respect to his/her hire, promotion, job assignment, tenure, terms, conditions or privileges of employment because of race, color, creed, national origin, age marital status, handicap, public benefit status, sex, or sexual orientation.

The Contractor further agrees to take affirmative action to achieve reasonable representation of minority groups and women on its work force. Such affirmative action shall include, but not be limited to the following: employment, promotion, demotion or transfer, recruiting or recruitment, advertising, layoff or termination, rates of pay or other forms of compensation and selection for training or education, including apprenticeships. The Contractor shall promptly furnish any information required by the City or the Human Rights Department pursuant to this Section B.

C. In the event the Contractor fails to comply with the provisions of Section B above, or any affirmative action undertaking outlined in its proposal documents, if any, or with any rules, regulations or orders issued by the Human Rights Department, the City as the Human Rights Department may impose such contract sanctions as it may deem appropriate, including but not limited to:

1. Cancellation, termination or suspension of this Contract in whole or in part;

2. Recovering from the Contractor by set off, against the unpaid portion of the Contract price or as otherwise agreed by the parties to this Contract, liquidated damages in the amount of one-half of one percent (.005) of the Contract price not to exceed five hundred dollars ($500.00) per day for each day of non-compliance, as determined by the Human Rights Department; and

3. Law may provide such other remedies.

26. CHANGES TO STANDARD CONTRACT DOCUMENTS (Continued)

Article 36 - FAIR EMPLOYMENT PRACTICES (Continued)

D. The Contractor further agrees that he shall notify any Subcontractor of his obligations relative to non-discrimination and affirmative action under this Contract when soliciting same and shall include the provisions of this Article in any subcontract, as well as provide the City with a copy of any subcontract agreement. The Contractor further agrees to take such action with respect to any subcontract procurement as the City may direct as a means of enforcing such provisions including the aforementioned sanctions of non-compliance.

E. Breach of the terms and conditions of this Article may be regarded as material breach of this Contract.

Also, incorporate the following Federal provisions with those normally required under the above Article. During the performance of this Contract, the Contractor agrees as follows:

1. The Contractor will not discriminate against any employee or applicant for employment because of race, color, religion, sex or national origin. The Contractor will take affirmative action to ensure that applicants are employed, and that employees are treated during employment without regard to their race, color, religion, sex or national origin. Such action shall include, but not be limited to, the following: employment, upgrading, demotion, or transfer; recruitment or recruitment advertising; layoff or termination; rates of pay or other forms of compensation; and selection for training, including apprenticeship. The Contractor agrees to post in conspicuous places, available to employees and applicants for employment, notices to be provided setting forth the provisions of this non-discrimination clause.

2. The Contractor will, in all solicitations or advertisements for employees placed by or on behalf of the Contractor, state that all qualified applicants will receive consideration for employment without regard to race, color, religion, sex or national origin.

3. The Contractor will send to each labor union or representative of workers with which he has a collective bargaining agreement or other Contract or understanding, a notice to be provided advising the said labor union or worker's representative of the Contractor's commitments under this section, and shall post copies of the notice in conspicuous places available to employees and applicants for employment.

4. The Contractor will comply with all provisions of Executive Order 11246 of September 24, 1965, and of the rules, regulations, and relevant orders of the Secretary of Labor.

5. The Contractor will furnish all information and reports required by Executive Order 11246 of September 24, 1965, and by rules, regulations, and orders of the Secretary of Labor, or pursuant thereto, and will permit access to his books, records, and accounts by Secretary of Housing and Urban Development and the Secretary of Labor for purposes of investigation to ascertain compliance with such rules, regulations, and orders.

26. CHANGES TO STANDARD CONTRACT DOCUMENTS (Continued)

Article 36 - FAIR EMPLOYMENT PRACTICES (Continued)

General Conditions E. (Continued)

6. In the event of the Contractor's noncompliance with the nondiscrimination clauses of this Contract or with any of the said rules, regulations, or orders, this Contract may be canceled, terminated, or suspended in whole or in part and the Contractor may be declared ineligible for further Government Contracts or Federally-Assisted construction contracts in accordance with procedures authorized in Executive Order 11246 of September 24, 1965, and such other sanctions may be imposed and remedies invoked as provided in Executive Order 11246 of September 24, 1965, or by rule, regulation, or order of the Secretary of Labor, or as otherwise provided by law.

7. The Contractor will include the portion of the sentence immediately preceding paragraph 1 and the provisions of paragraphs 1 through 7 in every subcontract or purchase order unless exempted by rules, regulations, or orders of the Secretary of Labor issued pursuant to Section 204 of Executive Order 11246 of September 24, 1965, so that such provisions will be binding upon each Subcontractor or vendor. The Contractor will take such action with respect to any subcontract or purchase order as the administering agency may direct as a means of enforcing such provisions, including sanctions for noncompliance: provided, however, that in the event a Contractor becomes involved in, or is threatened with, litigation with a Subcontractor or vendor as a result of such direction by the Secretary of Housing and Urban Development, the Contractor may request the United States to enter into such litigation to protect the interests of the United States.

F. Federal References

Whenever the term "Administrator, Housing and Home Finance Agency" occurs in the Specifications, this shall be changed to read: "Secretary of Housing and Urban Development", and the term "Housing and Home Finance Agency" shall be changed to: "Department of Housing and Urban Development".

G. City References

1. Whenever the "Environmental Protection and Maintenance Department" is referred to, this shall be changed to read, "Department of Public Works".

2. Whenever "Director" is referred to, this shall be changed to read, "City Engineer, City Engineering Division – DPW".

General Conditions: Article 40 - Contract Deductions for City of Detroit Personnel Overtime Pay.

Delete this Article in its entirely and substitute with the following:

SPECIAL NOTICE TO BIDDERS

26. CHANGES TO STANDARD CONTRACT DOCUMENTS (Continued)

Article 36 - FAIR EMPLOYMENT PRACTICES (Continued)

Add the following Article:

General Conditions
Article 40 - Contract Deductions for City of Detroit Personnel Overtime Pay

Overtime shall be limited to the work days submitted on the progress schedule for the project. The workdays used to develop the progress schedule shall be Monday - Saturday and shall not include Sundays or City Holidays. Overtime work on Sundays and City Holidays shall be limited to emergency work necessary to safeguard the health and safety of the public.

The following are current City holidays: New Year's Day, Martin Luther King's Birthday, Good Friday, Memorial Day, Independence Day, Labor Day, Veteran's Day, Thanksgiving Day, Friday after Thanksgiving, Christmas Eve, Christmas Day, New Year's Eve. The Contractor shall be responsible for confirming with the City Engineering Division, 2 Woodward Avenue, Room 601 Coleman A. Young Municipal Center, Detroit, Mi 48226 for any amendments to this list of calendar dates designated as paid holidays for City of Detroit employees.

"The unit rate per hour for the purpose of overtime pay deductions, as referred in Article 9, of the General Specifications "Hours of Work", shall be **$30.00/per hour** for each individual employee for project inspectors, plant inspectors, and laboratory personnel assigned to this project.

The overtime pay deductions shall be calculated according to the following schedule."

In excess of eight hours per day - Monday thru Friday

Excluding Holidays	.....	"1.5 times" unit rate per hour
Saturday	.....	"1.5 times" unit rate per hour
Sunday and Holidays	.....	"2.0 times" unit rate per hour

27. PRE-PERFORMANCE CONFERENCE

Before the starting notice is issued, the City Engineer will call conference for the purpose of discussing the labor standards provisions of the Contract. The conference shall be attended by the prime contractor, subcontractors, and by representatives of the City and Federal Government.

28. SUBCONTRACTS

A. The Contractor shall not execute an agreement with any Subcontractor or permit any Subcontractor to perform any work included in this contract, until he has submitted a Non-Collusion Affidavit from the Subcontractor in substantially the form shown on the attached sheet, and has received written approval of such Subcontractor from the City.

B. No proposed Subcontractor should be disapproved by the City without cause.

SPECIAL NOTICE TO BIDDERS

29. ACCIDENT PREVENTION

A. The Contractor shall exercise proper precaution at all times for the protection of persons and property and shall be responsible for all damages to persons or property, either on or off the site, which occur as a result of his fault or negligence in connection with the prosecution of the work. The safety provisions of applicable laws and building and construction codes shall be observed and the Contractor shall take or cause to be taken such additional safety and health measures as the City may determine to be reasonably necessary. Machinery, equipment and all hazards shall be guarded in accordance with the safety provisions of the "Manual of Accident Prevention in Construction", published by the Associated General Contractors of America, Inc., to the extent that such provisions are not in conflict with applicable local laws.

B. The Contractor shall maintain an accurate record of all cases of death, occupational disease, and injury requiring medical attention or causing loss of time from work, arising out of and in the course of employment on work under the Contract. The Contractor shall promptly furnish the City with reports concerning these matters.

30. SANITARY FACILITIES

The Contractor shall furnish, install and maintain ample sanitary facilities for the workmen. As the needs arise, a sufficient number of enclosed temporary toilets shall be conveniently placed as required by the sanitary codes of the State and Local Government. Drinking water shall be provided from an approved source, so piped or transported as to keep it safe and fresh and served from single service containers or satisfactory types of sanitary drinking stands or fountains. All such facilities and services shall be furnished in strict accordance with existing and governing health regulation.

31. REVIEW BY CITY AND HUD

The City, its authorized representatives and agents, and the HUD Representative for the Administrator (as defined under GENERAL CONDITIONS, PART II, Page LP-1) shall, at all times, have access to and be permitted to observe and review all work, materials, equipment, payrolls, personnel records, employment conditions, and other relevant data and records pertaining to this Contract, provided, however, that all instructions and approvals with respect to the work will be given to the Contractor only by the City through its authorized representatives or agents.

32. WORKING AREA

The Contractor will be required to submit to the Engineer written evidence indicating that the Contractor has secured permission to use for construction purposes the property adjacent to the public right-of-way that is owned by private individuals and/or the Community Development Commission. The Community Development Commission may grant the Contractor permission to use their property providing the Contractor complies with the following conditions:

1. Prior to starting the work, the Contractor shall prepare and submit to the Engineer a drawing indicating the limits of the work area required for his operations and said area is not to exceed twenty-five (25) feet beyond the existing curb of the street. The work area shall be sufficient for storage of materials and supplies, for hauling of materials and for parking of his employees' cars.

2. The Engineer, the Contractor, and a representative of the Community Development Commission will inspect the proposed working area and will note the condition of the area with regard to grade, type, and condition of surface, and existing vegetation.

SPECIAL NOTICE TO BIDDERS

32. WORKING AREA (Continued)

3. After receiving approval of the work area, the Contractor shall place stakes, which shall define the limits of the work area. The Contractor shall inform his employees, subcontractors, and suppliers that all operations shall be restricted to the approved work area. The Contractor shall be responsible for restricting his work force from trespassing outside the limits of the approved work area.

4. Prior to completing the Contract, the Contractor shall restore the approved work area and any additional adjoining area that has been damaged by the operations of the Contractor, the Contractor's employees, subcontractors and suppliers. The restoration shall include removal of surplus soil and/or the furnishing and placing of additional fill if required, re-grading, preparation of soil for rye seeding, if required, and the furnishing and sowing of rye seed, if required. Concrete batch plant or materials for mixing concrete for paving are not to be located on the job site.

33. AFFIRMATIVE ACTION - INFORMATION TO BIDDERS

The bidder's attention is directed to the Standard Federal Equal Employment Opportunity Construction Contract Specifications (Executive Order 11246).

Failure of Contractors or subcontractors to comply with Federal Rules and Regulations regarding Equal Employment Opportunity and Affirmative Action can result in the withholding of the advance of construction money until all deficiencies have been resolved.

Failure of Contractors or subcontractors to keep proper and adequate records and to submit proper and adequate reports can result in Federal action to withhold the advance of construction money until all deficiencies have been resolved.

A. Contracts Under $100,000

If the Contractor intends to utilize subcontractors, he shall make efforts acceptable to HUD to solicit minority subcontractors to bid and perform on this project. Assistance in this matter can be obtained from:

Michigan Minority Business Development Council
2990 West Grand Boulevard
Detroit, Michigan 48202
313- 873-3200 313-873-4783 Fax

B. Contracts Over $100,000

If the Contractor intends to utilize subcontractors, he shall make efforts acceptable to HUD to solicit minority subcontractors to bid and perform on this project. Such effort may include, but not be limited to, contacts with minority contractor organizations (such contacts shall be in person) and affirmative action steps taken to accomplish minority contractor involvement (e.g. split contracts, mini-contracts, etc.). A minority contractor organization located in this area is:

Michigan Minority Business Development Council
2990 West Grand Boulevard
Detroit, Michigan 48202
313- 873-3200 313-873-4783 Fax

All bidders who anticipate using subcontractors on this project shall submit evidence with their bids that acceptable efforts as minority Subcontractor solicitation have been made.

SPECIAL NOTICE TO BIDDERS

34. SECTION 3 CLAUSE

Not Used

35. AUDIT ACCESS

If applicable, the Contractor shall keep and maintain all books, records and other documents relating directly to the receipt and disbursement of the corpus and any duly authorized representative of the Secretary of the United States Department of Housing and Urban Development or Comptroller General of the United States shall, at all reasonable times, have access to and the right to inspect, copy, audit and examine all such books, records and other documents of the Contractor until three (3) years after the completion of all close-out procedures respecting the use of such funds, and until the final settlement and conclusion of all issues arising out of the use of such funds.

36. COMPLIANCE WITH CLEAN AIR AND WATER ACTS

If applicable, the Contractor agrees to comply with all applicable standards, orders or requirements issued under Section 306 of the Clean Air Act (42 U.S.C. 1857 (h), Section 508 of the Clean Water Act (33 U.S.C. 1368), Executive Order 11738, and Environmental Protection Agency regulations (40 CFR Part 15).

The Contractor agrees to report violations to HUD and to the U.S.E.P.A. Assistant Administrator for Enforcement (EN-329). The Contractor recognizes mandatory standards and policies relating to energy efficiency which are contained in the State energy conservation plan issued in compliance with the Energy Policy and Conservation Act (P.L. 94-163).

37. RETAINAGE REQUIREMENT STATE ACT 524 OF 1980

Notwithstanding anything contained herein to the contrary, if not in conflict with federal law or regulation, the following terms and conditions shall apply to this contract to the extent required by Act No. 524 of Public Acts of 1980 (the "Act"):

A. As provided in the Act, the following persons are hereby designated to receive and submit, respectively, the requests for progress payments:

For the City: Engineer of Streets

B. The following person is hereby designated as the "Architect or Professional Engineer": City Engineer, City Engineering Division - DPW

C. The City shall retain a portion of the progress payments otherwise due to the Contractor (The "Retainage") as follows:

1. The City shall retain ten percent (10%) of the dollar value of all work in place until work is fifty percent (50%) in place;

SPECIAL NOTICE TO BIDDERS

37. RETAINAGE REQUIREMENT STATE ACT 524 OF 1980

2. After the work is fifty percent (50%) in place, additional Retainage shall not be withheld unless the City determines that the Contractor is not making satisfactory progress, or for other specific cause relating to the Contractor's performance under this contract. If the City so determines that the Contractor is not making satisfactory progress or other specific cause relating to the Contractor's performance under his contract exists, the City may retain an additional amount of the progress payments otherwise due the contractor, which additional amount shall not exceed ten percent (10%) of the dollar value of work more than fifty percent (50%) in place. In any event, the Retainage withheld by the City pursuant to the Act shall not exceed the pro rata share of the City's matching requirements, provided, however, that if the provisions of any federal or state law or regulation provide for the retention of a different amount, the provisions of such other law or regulation shall govern.

D. All retained funds that are deposited in a regulated financial institution pursuant to the Act shall bear interest at the rate determined by the financial institution in which the retained funds are deposited.

E. Each progress payment requested shall be paid by the City to the Contractor within the following time period:

1. Thirty (30) days after the Engineer's or Architect's periodic Certified Payment Estimate; or

2. Fifteen (15) days after the City has received the funds with which to make the progress payment from a department or agency of the federal or state government, if any funds are to come from either of these sources.

In the event that the City fails to make a progress payment within the above stated period of time, and upon request by the Contractor to pay a reasonable interest charge, the reasonable interest rate payable by the City shall be six percent (6%). Interest will begin to accrue only on the thirty-first (31st) day, if payment was due according to paragraph (1) above, or on the sixteenth (16th) day if payment was due according to paragraph (2).

The actual "date of payment" of a progress payment shall be deemed to be the date on the check issued by the City for such payment.

F. If at any time during the term of this contract a dispute arises between the City and the Contractor as to whether there has been a delay for reasons that were within the control of the Contractor, or as to the period of time that such delay for reasons that were within the Control of the Contractor, or as to the period of time that such delay has been caused, continued, or aggravated by actions of the Contractor; or if at any time after ninety-four percent (94%) of work time after ninety-four percent (94%) of work under the contract is in place, a dispute between the City and the Contractor arises as to whether there has been an unacceptable delay by the Contractor in performance of the remaining six percent (6%) of work under the contract; the City and the Contractor agree to submit the foregoing disputes to the decision of an agent, at the option of the City and in accordance with provisions of the Act. The City and the Contractor shall bear equally all costs of the agent to whom a dispute is submitted for a decision, which decision shall be made by the agent pursuant to, and in accordance with, the provisions of the Act.

SPECIAL NOTICE TO BIDDERS

38. PREVAILING WAGE

In accordance with CITY OF DETROIT ORDINANCE 01-04, the current schedule at the time of bidding of the prevailing wage and fringe benefits for all classes of construction trade workers shall be used in this contract.

The rate of wages and fringe benefits to be paid to each class of construction trade workers by the Contractor and all of his/her Subcontractors shall not be less than the wage and fringe benefits so specified.

39. SUBCONTRACTOR UTILIZATION (EXECUTIVE ORDER NO. 4)

In accordance with the City of Detroit Executive Order No. 4, this contract requires a minimum of 30% of the total contract dollar amount to be subcontracted to Detroit Based Businesses or Small Businesses.

40. PROMPT PAYMENT

The individual responsible for accepting performance under this Contract is:

Mr. Richard Doherty, P.E. City Engineer
DPW - City Engineering Division
2 Woodward Avenue, 601 Coleman A. Young Municipal Center
Detroit, Michigan 48226
313-224-3955 Telephone
313-224-3471 Fax
dohertyri@detroitmi.gov

The contact person from whom payment should be requested is:

Mr. Michel Bongo, Manager II
Finance-Central Accounting/DPW
2 Woodward Avenue, 646 Coleman A. Young Municipal Center
Detroit, Michigan 48226
313-628-2623 Telephone
313-628-2631 Fax
bongom@detroitmi.gov

41. INVOICING

Each invoice submitted requires a valid unique invoice number to facilitate the payment process. All invoices submitted shall adhere to the City's requirements for a proper invoice number and shall not contain any of the following:

- Alphabetic suffixes (e.g. 123A)
- Numeric suffixes (e.g. 123-3)
- Periods, dashes, slashes, hyphens or extraneous characters or spaces

Additionally, each invoice shall include all of the following information:

For: DPW-City Engineering Division (or other applicable Dept/Div)
Date of invoice
Time period of service (s) provided (if applicable)
Contractor's/Vendor's Federal ID Number
Valid Purchase Order Number (CPO/SPO number (s) and PW Number

41. INVOICING (Continued)

Submit only the original invoice to:

City of Detroit, Finance-Accounts Payable Division
2 Woodward Avenue,
1006 Coleman A. Young Municipal Center
Detroit, MI 48226

Submit a copy of the invoice with all supporting documentation to:

DPW-City Engineering Division
Attention: Adrienne Smith
2 Woodward Avenue, Coleman A. Young Municipal Center
Detroit, MI 48226

In accordance with the Prompt Payment Ordinance, departments shall notify vendors of issues with invoices to facilitate timely payment. Any invoices submitted without a proper invoice number or that do not otherwise comply with the ordinance requirements will be referred back to the department for correction.

Failure to follow this procedure or include the requested information could delay payment.

STANDARD INSTRUCTIONS TO BIDDERS

1. GENERAL PURPOSE & INTENT

These Standard Instructions to Bidders contain information and requirements, which, in general, are common to all Contract Documents prepared by the City Engineer's Office of the City of Detroit in which these instructions are included. Such instructions and requirements apply to this Contract except as such may be modified and supplemented by specific instructions and requirements pertaining to this Contract contained elsewhere in these Contract Documents.

In addition to these instructions, the Advertisement and Special Notice to Bidders also contain information to bidders.

No effort is made to emphasize any particular provision of the Contract Documents, but bidders must familiarize themselves with every provision and its effect.

2. THE CONTRACT DOCUMENTS

The Contract Documents consist of the following, grouped as listed below:

PART I
- Advertisement
- Special Notice to Bidders
- Standard Instructions to Bidders
- Proposal
- Agreement
- Bond Forms
- Contract Forms

PART II
- General Specifications
- Detailed Specifications

PART III
- Contract Drawings, if any, when so stated in the "Special Notice to Bidders"

In addition to the above, any and all Bulletins issued become a part of the Contract Documents.

A "Table of Contents," bound in the front of Part I, lists the individual parts and major subdivisions for each individual part by title, and indicates the total number of pages in each individual part. When Contract Drawings prepared by the City Engineer are included, the individual drawing titles and numbers are also here listed.

In the process of assembling and binding the Contract Documents, individual pages or drawings may have been inadvertently omitted. Each bidder shall carefully and thoroughly examine his copy of the Contract Documents for completeness, for no claim of any bidder will be allowed on the basis that his copy of the Contract Documents was incomplete.

Titles, subtitles, headings, running headings and tables of content as used throughout the Contract Documents are merely convenience and in themselves are not a Contract provision or requirement and are not to be taken into account in any way in construing any of the rights or obligations of the parties to the Contract.

3. INTERPRETATION OF CONTRACT DOCUMENTS

Should any prospective bidder be in doubt as to the true meaning of any portion of the Contract Documents, or should he find any patent ambiguity, inconsistency, or omission thereon, he shall request the City Officer, in writing, for an official interpretation or correction. The person making the request will be held responsible for its prompt delivery.

Such interpretation or correction, as well as any additional Contract provision the City may decide to include, will be made only as a Bulletin which will be mailed or delivered to each person recorded as having received a copy of the Contract Documents. Any Bulletin issued by the City Officer shall become a part of the Contract Documents and shall be taken into account by each bidder in preparing his bid.

Only the Bulletin duly issued by the City Officer shall be binding, and prospective bidders are warned that no oral interpretation, information, or instructions by any officer or employee of the City is authorized.

4. BIDDER'S QUALIFICATION

Bids are solicited only form responsible bidders known to be skilled and regularly engaged in work of similar character and proportion to that covered by the Contract Documents.

After the opening of bids, when so requested by the City Engineer, the bidder shall promptly submit a certified written statement setting forth such information as the City may require concerning his prior experience and performance record, other work now under contract, financial condition, personnel, and qualifications of his working organization, available equipment and the major parts of the work proposed to be sublet

In addition to the above, and when so requested by the City Engineer, the bidder shall meet with the city's representatives and give further information in relation to his proposed tentative construction plan and schedule of operations and such other matters as the City may deem necessary in order to determine the bidder's qualifications, responsibility and ability to perform and complete the work in accordance with the Contract requirements

5. BIDDER'S EXAMINATIONS & INVESTIGATIONS

The prospective bidder shall carefully and thoroughly examine all parts of the Contract Documents and all maps, drawings, and other data mentioned therein as being on file in the City Engineer's Office for examination.

STANDARD INSTRUCTIONS TO BIDDERS

The bidder shall make an inspection of the site of the proposed work, as well as its adjacent area, and determine for himself all conditions under which he will be obliged to work.

The submission of a proposal shall, in itself, be conclusive evidence that the bidder has made all examinations and investigations he deemed necessary to properly prepare a proposal meeting all Contract requirements.

No plea of ignorance of conditions that may exist or that may hereafter exist, or of difficulties that may be encountered in the execution of the work under this Contract, as a result of the bidder's failure to make prudent examinations and investigations will be accepted as an excuse for any failure or omission on the part of the Contractor to fulfill in every detail all requirements of the Contract Documents, or will be accepted as a basis for a claim for extra compensation, damages, or for an extension of the time of completion.

6. LABOR & MATERIALS

The City of Detroit will not furnish any labor, materials or supplies unless specifically provided for in the Contract.

A. Materials: All materials and equipment incorporated in the work of this Contract shall be new. No secondhand or salvaged materials or equipment will be permitted unless specifically specified.

B. Availability of Materials: The specified time of completion is based upon the availability of the required materials. It will be assumed by the City that each bidder will have made his own investigation and determination of the probable availability of the required materials in the amounts and at the times necessary to complete the work within the time allowed for completion.

If, during construction, certain materials cannot be obtained in the quantities and/or at time necessary to complete the work within the time allowed, then an extension of time of completion will be considered in accordance with the provisions of Article 18, "Delays and Extension of Time," of the General Conditions provided:

1) The materials which in the judgment of the Engineer were properly determined to be available at time of bidding, become unavailable during construction;

2) Diligent efforts have been made by the Contractor to secure the materials;

3) The Engineer has been notified sufficiently in advance so that available substitutions could have been considered.

4)

Delay in securing any specific materials shall not be used as the basis for delaying the construction of other parts of the work not dependent upon such delayed materials.

7. BASIS OF BID - PRICE REQUIRED

The Special Notice to Bidders designates the basis on which the price or prices are required. Such price or prices are to be submitted in accordance with the following provisions such as are applicable to the basis designated for this Contract.

In arriving at the price or prices bid, the bidder shall make his own estimates of the facilities and difficulties attending the performance of the proposed Contract, including local conditions, availability of materials, uncertainty of weather, and all other contingencies. It is the intent of the Contract Documents to provide for finished work and any miscellaneous items clearly necessary to this end shall be considered a Contract requirement whether or not specifically included in the Contract Documents.

A. Single Lump Sum Price: When proposals are invited on the basis of a lump sum price for the entire work included in the Contract, then only a single lump sum price shall be submitted.

B. Lump Sum Price for All or Parts of the Work: When proposals are invited on the basis of a lump sum price for the entire work included in the Contract with the option for separate bids on designated parts of the work, the bidder may submit a lump sum price for the entire work and or separate lump sum prices for such of the designated parts he is qualified to perform.

C. Lump Sum Prices for Designated Parts of the Work: When proposals are invited on the basis of separate lump sum prices designated for parts of related work with no provision for a single lump sum price for the entire work, the bidder may submit a lump sum price for each of the designated parts he is qualified to perform. No price shall be submitted for doing the entire work, or combination of parts thereof, as a single contract.

D. Lump Sum Price - Two or More Independent Contracts: When the Proposal is common to two or more Contracts for work which is distinctly separated but of the same general type, the bidder may submit a lump sum price for such Contracts as he selects, with the Proposal for each Contract to be considered independently. Unless the Proposal otherwise provides, it will be understood that the bidder considers himself qualified to perform concurrently each of the Contracts for which he submits a price and to perform each in accordance with its own specific Contract requirements.

When the Proposal so provides, a bidder, whose capacity for doing concurrent work prevents him from accepting all the contracts on which he may desire to submit proposals, may submit a lump sum price on such contracts as he selects with the understanding that he would be awarded only the total number of contracts which he stipulates in the Proposal that he has the capacity to accept and perform concurrently. However, the bidder shall not designate

STANDARD INSTRUCTIONS TO BIDDERS

which he submits a price and to perform each in accordance with its own specific Contract requirements.

When the Proposal so provides, a bidder, whose capacity for doing concurrent work prevents him from accepting all the contracts on which he may desire to submit proposals, may submit a lump sum price on such contracts as he selects with the understanding that he would be awarded only the total number of contracts which he stipulates in the Proposal that he has the capacity to accept and perform concurrently. However, the bidder shall not designate which particular contract or contracts he would accept in event he is the low bidder on more contracts than he has the capacity to perform concurrently. The determination of on what contract or contracts a bidder is considered to have submitted the actual low bid or bids will be made by the City on the basis of the bids which will result in the entire work of all contracts being done for the least cost to the City.

When the Proposal so provides, and not otherwise, the bidder may submit a lump sum price for doing as a single contract all the work of the individual contracts in such combination as listed in the Proposal.

E. Unit Price: When Proposals are invited on the basis of unit prices for various items, the bidder shall state a unit price for each and every item listed in the Proposal form, and such prices shall be extended and totaled. If, during the review of the Proposals, the City finds any errors in any extension or total, the City will make the necessary corrections and award the Contract on the basis of such corrections, since the unit prices shall govern.

Any proposal which does not contain a unit price for each item listed will be deemed incomplete and will not be considered in the award of the Contract.

Any work not specifically mentioned in the payment items listed in the Proposal shall be considered incidental to one or more of the payment items, and no claim for additional compensation will be allowed. The bidder shall not add to the listed items, or combine any of the items.

The quantities for the various items of work appearing in the Proposal, while stated with as much accuracy as possible in advance, are approximate only and given solely to provide a uniform basis for comparing bids and determining the amounts of the bonds. The actual quantities required to complete the work and for which payment will be made, may be more or less than those stated in the Proposal, and, if so, no claim for damages or loss of profits will be allowed.

The unit price for each of the several items in the Proposal shall include its pro rata part of overhead and be such that the whole of the unit prices will represent a balanced bid. Any proposal in which the unit prices bid for any of the several items are deemed by the City to be manifestly unbalanced may be rejected by the City and not considered in the award of the Contract and may cause the entire bid to be rejected.

8. PREPARATION OF PROPOSALS

Proposals shall be carefully prepared in strict accordance with the Contract requirements and these instructions, otherwise the bid may be rejected and not considered in the award of the Contract.

A. Form: The blank form of Proposal supplied by the City shall be used. The form shall not be detached, but shall be submitted intact as originally bound. No change shall be made in the wording of the form or in any of the items mentioned therein, nor shall any special conditions be made or included as part of the bidder's proposal. Proposals shall be filled out legibly in ink. Erasures or other changes in the bid shall be explained or noted over the signature of the bidder.

B. State of Prices: The price or prices bid shall be stated in figures only and in the proper space or spaces provided in the Proposal form.

C. Evaluated Bid: When the Proposal provides for evaluated bids, full information shall be supplied and computations shall be made by the bidder in accordance with the manner and method provided for in the Proposal. If, during the review of the Proposals, the City finds any errors in the bidder's computation, the City reserves the right to make the necessary corrections, including the changing of any values used in the computation found to be a variance with basic information or data furnished by the bidder. When information is required to supplement the statements made by the bidder, it shall be furnished in accordance with the next following section.

D. Information Required: When the Special Notice to Bidders or the Proposal form so requires, certain information, in addition to the price bid, shall be furnished as part of the bidder's proposal. Failure of the bidder to submit the required information or the submission of the information in an inaccurate or incomplete form may be cause for rejection of the entire Proposal.

1) Bidder's Drawings and Specifications: When bidder's drawings and/or specifications are required to be submitted, they shall be in sufficient detail to fully and distinctly show and describe the equipment which the bidder proposes to furnish, including the kind and quality of the material and workmanship that will be used in the various parts. If any general drawings, specifications, catalogs, or other literature are submitted which contain information or data not pertaining to the particular equipment proposed to be furnished, appropriate notations to that effect must be made.

STANDARD INSTRUCTIONS TO BIDDERS

2) Other Information: When the Proposal form provides space for inserting required information, such space is to be used. If the bidder finds such space insufficient, then the required information may be submitted on separate sheets properly identified as part of the bidder's proposal .

3) Supplemental Information: The bidder may submit such supplemental information, as he may desire, describing the equipment he proposes to furnish. However, the bidder is to completely fill out the Proposal form even though some of the information required to be stated in the Proposal may be contained in the supplemental information furnished.

E. Conditional Bids: Any stipulation or qualification contrary to the Contract requirements made by the bidder in or accompanying his proposal as a condition for the acceptance of the Contract will not be considered in the award of the Contract and may cause the rejection of the entire Proposal.

F. Waiver: The bidder's attention is called to the paragraph in the Proposal headed "Waiver." This is included for the purpose of avoiding any controversy over the claim of any bidder of the right to refuse to execute the Contract and demand the return of his bid deposit on the grounds of error, mistakes, or omissions made by him in his Proposal.

G. Name, Legal Status, and Bidder's Signature: Each bid shall contain, on page P. 4 of the Proposal form, the following information inserted in the respective places provided therefore:

1) Full business name of bidder together with Federal Treasury number.

2) Business address.

3) Signature of bidder. The person signing the Proposal shall use his usual signature, followed by his name legibly printed on the line next below.

4) Date of proposal.

The following are additional requirements, according to the bidder's legal status:

Individual

1) Legal status - place "X" in box for "Individual."

2) Home address and Social Security number

A bid by a person who adds to his signature the word "President," "Partner," "Agent," or other designation, without disclosing his principal, may be held to be the bid of the individual signing.

Doing Business Under An Assumed Name

1) Legal status - place "X" in box for "Doing business under an assumed name" together with Federal Treasury number.

2) County in Michigan in which assumed name is registered.

3) Home address of individual and Social Security number.

Co-Partnership

1) Legal status - place "X" in box for "Co-partnership."

2) County in Michigan in which co-partnership is registered.

3) Names and home address of all partners, together with Social Security numbers.

4) Signature of one of the partners, followed by the word "Partner" on the line "Title."

Corporation

1) Legal status - place "X" in box for "Corporation."

2) Name of state under whose laws the corporation is incorporated.

3) If not a Michigan corporation - indicate by "X" in appropriate box if the corporation is licensed to do business in Michigan. An out-of-state corporation will be required to have such license at the time the Contract is executed.

4) Full names, titles, and home addresses of corporation officers, and Social Security numbers.

5) Signature of authorized officer of corporation, followed by his title.

6) Corporate seal affixed.

7) "Certificate" for signature and seal - page P. 5 of Proposal - shall be executed by an officer other than the one signing the Proposal.

Agent

If the bid is signed by an individual acting as an agent for the principal in whose name the Proposal is submitted, the addition to the above applicable requirements, there shall be attached to the Proposal a power-of-attorney evidencing authority of the individual to sign and submit the bid in the name of the designated principal.

STANDARD INSTRUCTIONS TO BIDDERS

9. BID DEPOSIT When the Advertisement states that the security is required with the Proposal to insure the acceptance and execution of the Contract and Bonds, no bid will be considered complete unless so guaranteed.

A. Amount: The amount of the bid deposit shall be not less than that stipulated in the Advertisement. In case the Proposal contains alternates, the amount of the bid security, if stated as a percentage of the bid, refers to the Base Bid. If the Proposal contains two or more Contracts, the amount of the bid security required is determined on the total amount of the bids for such Contracts for which bids are submitted.

B. Form: The bidder, at his option, may furnish either a certified check, bank draft, irrevocable bank letter of credit, or guaranty (bidder's) bond. If the bid deposit covers two or more contracts contained in the same Proposal form, one check, draft, irrevocable bank letter of credit, or guaranty bond may be used if properly identified to cover all contracts for which a bid is submitted. Cash deposits will not be accepted.

Check: The certified check or bank draft shall be drawn on a solvent bank and made payable without condition to the "Detroit Building Authority."

Irrevocable Bank Letter of Credit: The irrevocable bank letter of credit shall be drawn on a solvent bank and made payable to "Treasurer, City of Detroit." The Irrevocable Bank Letter of Credit shall be given in compliance with and subject to the provisions and term of the Uniform Commercial Code which was adopted in Michigan in 1962 in Public Act 174. (Authorized by Common Council Resolution September 2, 1969, JCC 2208.) The Irrevocable Bank Letter of Credit must be submitted on a form acceptable to the City of Detroit.

Bond: The guaranty (bidder's) bond shall be on the form supplied by the City. The bond shall be executed by a surety company licensed to do business by the State of Michigan, and in accordance with the instructions contained on the bond form.

C. Submission: The bid deposit, in whichever form, shall be enclosed in the same envelope as that containing the bid and is not to be submitted separately.

D. Return: The bid deposit of all bidders may be held by the City until all bids have been canvassed and the award of the Contract recommended to and approved by the City Council.

The bid deposit of the bidder awarded the Contract will be held until the Contract is duly executed and confirmed. The bid deposits of other than the successful bidder will be returned after the award has been made by the City Council.

E. Forfeiture: If the bidder to whom the contract is awarded, refuses or neglects to properly execute the Contract, or fails to furnish the required surety bonds, within 10 calendar days after written notice to him, the amount of the deposit shall be forfeited, and retained by the City of Detroit as liquidated damages.

10. SUBMITTING BID

A. Form: The Bid Documents containing the Proposal, together with the required bid deposit, shall be securely sealed in a suitable envelope clearly labeled as a bid identified by the Contract number stated in the Advertisement, and showing the bidder's name, so as to guard against premature opening.

B. Place and Time: Bids will be received during the regular business hours at the place and up to the time stated in the Advertisement, or up to the time as extended by Bulletin. Bids may be delivered in person or mailed, but delivery is the bidders' entire responsibility. Any bid received after the stated hour, even through the mail, will be returned unopened to the bidder.

C. Withdrawal: Bids received prior to the scheduled time for receipt of bids will be kept securely, unopened. No bid after being received by the City will be returned to a bidder prior to the opening of bids. After the opening and reading of the bids, no bid may be withdrawn before the expiration of the number of days specified in the Advertisement, and then only in writing and in advance of the actual award. Negligence on the part of the bidder in preparing the bid confers no right for the withdrawal of the bid before or after it has been opened.

D. Modifications: No bid after being submitted may be modified or changed by letter, telegram, or other means, and if any such modification is received by the City, it will not be considered in the award of the Contract. No bidder will be permitted to submit more than one bid.

11. OPENING OF BIDS All bids received will be publicly opened and read aloud promptly after the designated time at the place stated in the Advertisement or as extended by Bulletin, and bidders are invited to be present.

12. COMPARISON OF BIDS

A. Lump Sum Bids: Bids on lump sum contracts will be compared on the basis of the lump sum price bid, adjusted for alternate prices bid if any are called for in the Proposal.

B. Unit Price Bids: Bids on unit price contracts will be compared on the basis of a total estimated price, arrived at by taking the estimated quantities of each item stated in the Proposal, multiplied by the corresponding unit prices bid, and including any lump sum bids on individual items. Any

STANDARD INSTRUCTIONS TO BIDDERS

errors found in the bidder's extensions or addition will be corrected, since the individual unit prices govern, and the total estimated price will be adjusted accordingly.

C. Evaluated Bids: Bids on an evaluated basis will be compared on the basis of the net evaluated bid price. Any errors found in the bidder's computation will be corrected and the net evaluated bid price adjusted accordingly. The Contract, if awarded, will be awarded at the bid price to the responsible bidder having the lowest net evaluated bid price.

13. REJECTION OF BIDS

The City of Detroit reserves the right to reject any and all bids or to waive any irregularity in any bid should be deemed for its best interest so to do. Without being limited thereto, a bid may be rejected if:

A. The Proposal does not strictly conform to the requirements of the Contract Documents or law;

B. The Proposal contains unit prices which, in the judgment of the Engineer, are unbalanced;

C. The Proposal is conditional;

D. The bidder misstates or conceals any material fact in the bid;

E. The bidder fails or refuses to promptly furnish the City information requested as to his qualifications and responsibility;

F. A determination is made by the City that the bidder is not qualified or responsible to perform the work.

14. AWARD OF CONTRACT

The Contract will be awarded to the lowest responsible bidder complying with the requirements of the Contract Documents, provided his bid is reasonable and the best interest of the City of Detroit will be served by accepting it. The Contractor will not be subdivided among two or more bidders unless the Proposal provides for separate bids on designated parts of the work, and then only when the total of the lowest reasonable bids for the individual parts is less than the lowest responsible bid for the entire work when a combined bid is permitted.

The Contractor will be deemed to be awarded after the formal approval of the Common Council of the City of Detroit has been obtained, and written notice by the City has been sent to the intended awardee. The Contract will not, however, be valid or binding upon the City until the Contract Agreement has been duly executed by both parties, the required Surety Bonds furnished, and the executed Contract Documents have been endorsed and confirmed in accordance with the City of Detroit Charter.

15. CONTRACT EXECUTION

The bidder to whom the Contract is awarded, shall within 10 calendar days after the Contract forms are presented to him, enter into written contract with the City by properly executing the Agreement and furnishing the required Performance Bond and Payment Bond and other information and affidavits as are required by and in strict accordance with the City's instructions accompanying the Contract forms.

Any delay by the successful bidder beyond the ten calendar days stipulated for submitting to the City Engineer in complete and acceptable form and number, the Agreement, Bonds, and other required information and affidavits, will cause a like number of calendar days being deducted from the total time stipulated for fully completing the work.

This provision in no way affects the rights of the City to require forfeiture of the bid deposit as provided for in Article 9E.

16. BOND REQUIREMENTS

The successful bidder to whom the Contract is awarded shall furnish at his own expense and at the time he submits his executed copies of the Contract, surety company bonds, on forms furnished by the City, conforming to the applicable statutes of the State of Michigan in effect at the time of the date of the bonds, as follows:

A. *Performance Bond*, to insure construction and completion of the entire work according to the requirements of the Contract and within the time allowed.

B. *Payment Bond*, for the protection of claimants supplying labor and materials to the principal contractor or his sub- contractors in the prosecution of the work.

Each bond shall run to the City of Detroit, Michigan, and each bond shall be in the full amount of the Contract price unless otherwise specified in the Special Notice to Bidders.

The surety company or companies shall be listed in the latest issue of U.S. Treasury Form 570, and shall be licensed to do business in the State of Michigan as evidenced by a copy of the "Certificate of Authority" issued by the Michigan State Department of Insurance filed with the Director. Should any surety upon the Contract be deemed unsatisfactory at any time to the City, notice will be given to the Contractor to that effect by the City, and the Contractor shall forthwith substitute a new surety or sureties satisfactory to the City and without any additional cost to the City.

STANDARD INSTRUCTIONS TO BIDDERS

An executed copy of each bond will be required for each copy of the executed Contract. The date of the bonds shall be the same as the date of the Contract.

17. ASSIGNMENT OF CONTRACT

Bidder's attention is directed to Article 29 of the General Conditions, "Assignment." The City will not consider the assignment or transfer of the Contract unless an exigency occurs which was not known or could not have been foreseen by the bidder at the time of bidding. No assignment or transfer will be approved which is not in the best interest of the City.

18. SUBCONTRACTS

The bidder's attention is directed to Article 28 of the General Conditions, "Subcontracts." No portion of the work may be sublet without the prior written approval of the City. Bids shall be based on letting subcontracts, whenever possible, to Detroit companies. Subcontractors must agree to do their work in Detroit and to use Detroit labor where practicable to give the kind of work specified.

When the Proposal so provides, the bidder shall name the persons or firms he proposes to use as subcontractors for such parts of the work specifically listed in the Proposal. All persons or firms so named shall be acceptable to the City of Detroit and if any are not acceptable, the bidder will be required to name other persons or firms which are acceptable. Any such required substitutions will in no way otherwise change or modify the bidder's Proposal. After the award of the Contract, no substitutions will be allowed except for reasons deemed justified by and in the best interest of the City.

PROPOSAL

FOR

PW-6971

PROPOSAL

TO : **City of Detroit**
Finance Department
Purchasing Division
Detroit, Michigan 48226

PROJECT:

PW-6971
CPO No. 2905959
SPO No. 2905960

5.0 MILES OF HMA RESURFACING AND MISCELLANEOUS CONSTRUCTION ON ALTER BETWEEN CHANDLER PARK & E. JEFFERSON, CADIEUX BETWEEN CHANDLER PARK & MORANG, MACK BETWEEN I-75 & RIOPELLE, E. SEVEN MILE ROAD BETWEEN I-75 & CONANT AND HARPER BETWEEN CADIEUX & I-94 CROSSOVER FOR THE DEPARTMENT OF PUBLIC WORKS

PART I - BASE BID

I. PRICE BID

The undersigned hereby proposes to furnish all materials and supplies and to provide all labor, construction tools and equipment and to perform and fully complete all the work required for the construction of the above described project for which unit prices are hereinafter submitted.

The undersigned agrees that any incidental work required to perform complete work and not specifically mentioned in the payment items shall be considered as incidental to the payment items and that no claim for additional compensation will be made.

The undersigned understands that the quantities stated in the Unit Price Schedule are approximate only and are subject to increase or decrease and the undersigned hereby agrees to perform all quantities of work as either increased or decreased in accordance with the requirements of the contract documents at the unit prices bid in the Unit Price Schedule.

PW-6971

HMA RESURFACING & MISC. CONSTRUCTION ON ALTER BETWEEN CHANDLER PARK & E. JEFFERSON, MACK BETWEEN I-75 & RIOPELLE, E. 7 MILE BETWEEN I-75 TO CONANT AND HARPER BETWEEN CADIEUX & I-94 CROSS OVER

REVISED UNIT PRICE SCHEDULE

Project Completion: 75 Days

NOTE: Unbalanced bids may be rejected. Each Unit Price quoted must accurately reflect the labor, equipment costs, and materials necessary to perform the described tasks. The quantity depicted on the bid form is our best estimate of the anticipated work, but changing site conditions or other factors may contribute to deviations from the planned quantities. It is incumbent that the Bidder accurately reflect the actual costs of services for each unit price listed on this form.

ITEM NO.	DESCRIPTION OF ITEM	QTY.	PAY UNIT	UNIT PRICE	ITEM TOTAL
1	1500001 Mobilization, Max. ____	1	LS	$231,025.00	$231,025.00
2	2040050 Pavt, Rem	184	Syd	$2.00	$368.00
3	2040055 Sidewalk, Rem	7,307	Syd	$12.00	$87,684.00
4	2047001 _ Curb, Rem, Modified	5,725	Ft	$7.00	$40,075.00
5	2050023 Granular Material, CI II	45	Cyd	$1.00	$45.00
6	2057021 _ Excavation, Earth, Modified	45	Cyd	$1.00	$45.00
7	3020010 Aggregate Base, 4 inch	350	Syd	$1.00	$350.00
8	4037001 _ Sewer Cleanout, Modified	1,730	Ft	$1.25	$2,162.50
9	4037030 _ Dr Structure Cover, Modified	89,893	Lb	$1.40	$125,850.20
10	4037050 _ Catch Basin A, Modified	4	Each	$200.00	$800.00
11	4037050 _ Catch Basin BT, Modified	4	Each	$200.00	$800.00
12	4037050 _ Dr Structure Cleaning, Modified	173	Each	$100.00	$17,300.00
13	4037050 _ Dr Structure Cover, Adj, Case 1, Modified	326	Each	$400.00	$130,400.00
14	4037050 _ Dr Structure Cover, Adj, Case 2, Modified	39	Each	$300.00	$11,700.00
15	4037050 _ Reconstruct Dr Structure, Case 1, Modified	4	Each	$850.00	$3,400.00
16	4037050 _ Reconstruct Dr Structure, Case 2, Modified	4	Each	$300.00	$1,200.00
17	5010001 Pavt, Cleaning	1	LS	$2,500.00	$2,500.00
18	5010005 HMA Surface, Rem	14,752	Syd	$1.87	$27,586.24
19	5010008 Pavt for Butt Joints, Rem	2,196	Syd	$1.87	$4,106.52
20	5010025 Hand Patching	25	Ton	$0.01	$0.25
SUBTOTAL P. 1a, ITEMS 1-20					**$687,397.71**

NAME OF CONTRACTOR: FORT WAYNE CONTRACTING, INC/AJAX PAVING INDUSTRIES, INC, A JOINT VENTURE

REVISED UNIT PRICE SCHEDULE (CONTINUED)

ITEM NO.		DESCRIPTION OF ITEM	QTY.	PAY UNIT	UNIT PRICE	ITEM TOTAL
21	5010051	HMA, 4E3	12,169	Ton	$62.50	$760,562.50
22	5010057	HMA, 5E3	9,127	Ton	$65.75	$600,100.25
23	5017011	_Cold Milling HMA Surface, Modified	110,627	Syd.	$1.87	$206,872.49
24	5017031	_Conditioning Existing Pavement, Modified	1,492	Ton	$0.01	$14.92
25	5017031	_HMA Approach, Modified	2,840	Ton	$0.01	$28.40
26	5017031	_HMA Shoulder, Modified	203	Ton	$260.00	$52,780.00
27	6027011	_Conc Pavt, Misc, Nonreinf, 8 inch, Modified	184	Syd.	$40.00	$7,360.00
28	6027011	_Pavt Repr,, Misc, Nonreinf Conc, 10 inch, Modified	350	Syd.	$40.00	$14,000.00
29	6037001	_Curb, Conc, Detail CD, Modified	5,725	Ft	$8.00	$45,800.00
30	6027011	_Pavt Repr, Rem, Modified	350	Syd.	$20.00	$7,000.00
31	8027001	_Detectable Warning Surface Tile, Modified	1,620	Ft	$84.25	$136,485.00
32	8027010	_Sidewalk Ramp, ADA, Modified	29,520	Sft	$4.00	$118,080.00
33	8027010	_Sidewalk, Conc, 4 inch, Modified	29,097	Sft	$3.40	$98,929.80
34	8027010	_Sidewalk, Conc, 6 inch, Modified	4,476	Sft	$3.60	$16,113.60
35	8027010	_Sidewalk, Conc Repl, 4 inch with Tree Roots, Modified	1,584	Sft	$5.10	$8,078.40
36	8027010	_Sidewalk, Conc Repl, 6 inch with Tree Roots, Modified	1,080	Sft	$5.50	$5,940.00
37	8110024	Pavt Mrkg, Ovly Cold Plastic, 6 inch, Crosswalk	1,159	Ft	$2.50	$2,897.50
38	8110041	Pavt Mrkg, Ovly Cold Plastic, 12 inch, Crosswalk	1,050	Ft	$5.95	$6,247.50
39	8110044	Pavt Mrkg, Ovly Cold Plastic, 18 inch, Stop Bar	502	Ft	$8.25	$4,141.50
40	8110063	Pavt Mrkg, Ovly Cold Plastic, Lt Turn Arrow Sym	4	Each	$155.00	$620.00
SUBTOTAL P. 1b, ITEMS 21-40						**$2,092,051.86**
NAME OF CONTRACTOR: FORT WAYNE CONTRACTING, INC/AJAX PAVING INDUSTRIES, INC, A JOINT VENTURE						

REVISED UNIT PRICE SCHEDULE (CONTINUED)

ITEM NO.	DESCRIPTION OF ITEM		QTY.	PAY UNIT	UNIT PRICE	ITEM TOTAL
41	8110068	Pavt Mrkg, Ovly Cold Plastic, Only	9	Each	$165.00	$1,485.00
42	8110069	Pavt Mrkg, Ovly Cold Plastic, Thru Arrow Sym	1	Each	$155.00	$155.00
43	8110071	Pavt Mrkg, Ovly Cold Plastic, Rt Turn Arrow Sym	4	Each	$120.00	$480.00
44	8110154	Pavt Mrkg, Sprayable Thermopl, 4 inch, White	1,415	Ft	$0.39	$551.85
45	8110154	Pavt Mrkg, Sprayable Thermopl, 4 inch, Yellow	27,910	Ft	$0.39	$10,884.90
46	8110197	Pavt Mrkg, Thermopl, 6 inch, Crosswalk	3243	Ft	$2.50	$8,107.50
47	8110217	Pavt Mrkg, Thermopl, 18 inch, Stop Bar	729	Ft	$8.25	$6,014.25
48	8117001	Pavt Mrkg, Modified Urethane, 6 inch, Cross Hatching, Yellow	350	Ft	$2.75	$962.50
49	8117001	_Recessing Pav't Mrkg, 6 inch	4402	Ft	$1.25	$5,502.50
50	8117001	_Recessing Pav't Mrkg, 12 inch	1,050	Ft	$2.45	$2,572.50
51	8117001	_Recessing Pav't Mrkg, 18 inch	1,231	Ft	$2.95	$3,631.45
52	8120012	Barricade, Type III, High Intensity, Double Sided, Lighted Furn	16	Each	$75.00	$1,200.00
53	8120013	Barricade, Type III, High Intensity, Double Sided, Lighted Oper	16	Each	$0.01	$0.16
54	8120140	Lighted Arrow, Type C, Furn	8	Each	$350.00	$2,800.00
55	8120141	Lighted Arrow, Type C, Furn	8	Each	$0.01	$0.08
56	8120170	Minor Traf Devices	1	LS	$149,775.00	$149,775.00
57	8120250	Plastic Drum, High Intensity, Furn	426	Each	$15.00	$6,390.00
58	8120251	Plastic Drum, High Intensity, Oper	426	Each	$0.01	$4.26
59	8120350	Sign, Type B, Temp, Prismatic, Furn	1,600	Sft	$4.00	$6,400.00
60	8120351	Sign, Type B, Temp, Prismatic, Oper	1,600	Sft	$0.01	$16.00
SUBTOTAL	**P. 1c, ITEMS 41-60**					**$206,932.95**

NAME OF CONTRACTOR: FORT WAYNE CONTRACTING, INC/AJAX PAVING INDUSTRIES, INC, A JOINT VENTURE

REVISED UNIT PRICE SCHEDULE (CONTINUED)

ITEM NO.	DESCRIPTION OF ITEM	QTY.	PAY UNIT	UNIT PRICE	ITEM TOTAL
61	8120370 Traffic Regulator Control	1	LS	$100,000.00	$100,000.00
62	8160090 Water, Sodding/Seeding	2	Unit	$150.00	$300.00
63	8167011 _Hydroseeding Modified	84	Syd	$10.00	$840.00
64	8167021 _Topsoil Surface, Furn, LM, Modified	28	Cyd	$35.00	$980.00
65	8237050 _Water Shutoff, Adj, Modified	29	Each	$300.00	$8,700.00
SUBTOTAL P. 1c, ITEMS 61-65					**$110,820.00**
GRAND TOTAL P.1a + P.1b + P.1c + P.1d, ITEMS 1-65					**$3,097,202.52**
NAME OF CONTRACTOR: FORT WAYNE CONTRACTING, INC/AJAX PAVING INDUSTRIES, INC, A JOINT VENTURE					

Quote ALL Unit Prices in US dollars with two (2) decimal points only (example: $0.00)

PROPOSAL

PART II CONDITIONS

II. 1 BID DEPOSIT

A bid deposit accompanies this Proposal in the form checked below:

☒ Bid Bond by Surety Company

☐ Certified Check or Bank Draft

☐ Irrevocable Bank Letter of Credit

Such deposit is in an amount not less than called for in the Advertisement, and is given as a guarantee of the good faith of the Undersigned and that the Undersigned will enter into written contract as provided, if successful in securing the award thereof; and it is hereby agreed that if at any time other than as provided in the Contract requirements and conditions, the Undersigned should withdraw this Proposal, or if this Proposal is accepted and should there be a failure on the part of the Undersigned to execute the Contract and furnish satisfactory Bonds within 10 days after the date of notification of the acceptance of this Proposal, in either of such events, the bid deposit shall be forfeited to the City of Detroit as liquidated damages, and not as a penalty; otherwise the bid deposited shall be returned to the Undersigned upon confirmation of the Contract.

II. 2 BIDDER'S EXAMINATIONS AND UNDERSTANDING

The Undersigned certifies that the Contract Documents listed in the Standard Instructions to Bidders, together with any and all Bulletins issued, have been carefully examined, and the site of the work has been inspected. The Undersigned declares that the amount and nature of the work is understood, and that at no time will misunderstanding of the Contract Documents be pleaded.

II. 3 BIDDER'S QUALIFICATIONS

The Undersigned declares that he has had prior experience in the type of work required by the Contract Documents and that he has the necessary finances, personnel and working organization, and equipment available to execute the proposed work in accordance with the requirements of the Contract Documents. The Undersigned further declares that he is prepared to and will promptly furnish a certified written statement regarding his qualifications, including finances, upon request of and on the forms provided by the City Engineer.

II. 4 STARTING AND COMPLETING WORK

The Undersigned declares that if awarded the Contract, he is prepared to and will start the work and complete the entire project in accordance with the provisions set forth under "Time of Starting and Completing Work" in the Special Notice to Bidders.

II. 5 BID NON-COLLUSIVE

The Undersigned certifies that this Proposal is fair and genuine, and not collusive or sham, and that he has not in any manner, directly or indirectly agreed or colluded with any other person, firm, or association to submit a sham bid or to refrain from bidding, or in any way to fix the amount of this Proposal or that of any other bidder, or to secure any advantage against the City of Detroit.

PROPOSAL

The Undersigned further certifies that no officer or employee of the City of Detroit is personally or financially interested, directly or indirectly, in this Proposal, or in any contract which may be made under it, or in the purchase or sale of any materials or supplies for the work to which it relates, or any portion of any expected profits thereto.

II. 6 BIDDER NOT IN ARREARS

The Undersigned certifies that, as of the date of this Proposal, he is not in arrears to the City of Detroit for debt or contract or is in any way a defaulter as provided for in Sec. 21-3-15, City Code (Ordinance No. 52H).

II. 7 WAIVER

The Undersigned certifies the price bid in this Proposal is correct and complete and stated as intended by the Undersigned for work covered by this Proposal, and, further, that all information given in or furnished with this Proposal is correct, complete, and submitted as intended by the Undersigned, and the Undersigned does hereby waive any right or claim he may now have or which may hereafter accrue to him, by reason of errors, mistakes, or omissions made by the Undersigned in this Proposal, to refuse to execute the Contract if awarded to him, or to demand the return of the Bid deposit, or to be relieved from any of his obligations as set forth in said Bid Deposit required with this Proposal.

II. 8 REJECTION OF BIDS

The Undersigned understands that the City of Detroit reserves the right to waive any irregularity in any bid, or to reject any or all bids.

PROPOSAL

PART III NAME, ADDRESS, LEGAL STATUS, AND SIGNATURE OF BIDDER

This Proposal is submitted in the name of:
Fort Wayne Contracting, Inc. / Ajax Paving Industries, Inc., Joint Venture
(Print full legal name)

45-0514373
38-1383205
Federal ID Number

The Undersigned hereby designates below his business address to which all notices, directions, or other communications may be served or mailed:

Street: 320 E. Seven Mile Rd.

City: Detroit Zip Code: 48203 State: MI

Telephone No: 313-368-3400 Fax No: 313-368-3406

Contact Name & Title: Patty Hopkins - Controller

E-Mail Address: patty@fortwaynecontracting.com

The Undersigned hereby declares that he had the legal status checked below:

☐ **INDIVIDUAL**

☐ **DOING BUSINESS UNDER AN ASSUMED NAME**, which is registered with the County of Clerk of the County of _____, Michigan

☐ **CO-PARTNERSHIP**, which is registered with the County Clerk of the County of _____, Michigan

☒ **CORPORATION**, incorporated under the laws of the State of _____
(If other than Michigan Corp.)

Now licensed to do business in Michigan ☐ YES ☐ NO

☒ Certificate on P. 5 has been executed as evidence the person signing has the authority to commit the corporation to this Proposal

The names, titles and home addresses of all persons directly interested in this Proposal are as follows:

NAME AND TITLE	HOME ADDRESS (Include City, State & Zip Code)
Christopher R. Hanna - President - Fort Wayne Contracting, Inc	
Robert Farina - Estimating Manager - Ajax Paving, Industries	

Signed and Sealed

This 8th day

of April, 20 15

By [signature] (Signature)

Robert Farina

Title President - Fort Wayne Contracting, Inc
(Printed Name of Signer)
Est. Manager - Ajax Paving, Industries

PROPOSAL

(Note: Bidder, if a corporation, shall cause the following certificate to be executed, provided that the same officer shall not execute both the proposal and the certificates.)

CERTIFICATE

I, James A. Jacob, certify that I am the Corporate Secretary of the corporation named as Bidder herein; that Robert Farina who signed this Proposal on behalf of said corporation, was then Estimating Manager of said corporation; that said Proposal was duly signed and the corporate seal affixed for and in behalf of said corporation by authority of its governing body, and is within the scope of its corporate powers.

4/8/15
(Date)

James A. Jacob
(Signature)
James A. Jacob - Secretary
Ajax Paving Industries, Inc.

NON-COLLUSION AFFIDAVIT OF PRIME BIDDER

State of Michigan
SS
County of Wayne

Christopher B. Honore being first duly sworn, deposes and says that:

1. He is President, Treasurer, Secretary of (owner, partner, officer, representative, or agent) Fort Wayne Contracting, Inc., the bidder that has submitted the attached bid,

2. He is fully informed respecting the preparation and contents of the attached bid and of all pertinent circumstances respecting such bid;

3. Such a bid is genuine and is not a collusive or sham bid;

4. Neither the said bidder nor any of its officers, partners, owners, agents, representatives, employees or parties in interest, including this affiant, has in any way colluded, conspired, connived or agreed, directly or indirectly with any other bidder, firm or person to submit a collusive or sham bid in connection with the contract for which the attached bid has been submitted or to refrain from bidding in connection with such contract, or has in any manner, directly or indirectly, sought by agreement or collusion or communication or conference with any other bidder, firm or person to fix the price or prices in the attached bid or any other bidder, or to fix any overhead, profit or cost element of the bid price or the bid price of any other bidder, or to secure through any collusion, conspiracy, connivance or unlawful agreement any advantage against the City of Detroit or any person interested in the proposed contract; and

5. The price or prices quoted in the attached bid are fair and proper and are not tainted by any collusion, conspiracy, connivance or unlawful agreement on the part of the bidder or any of its agents, representatives, owners, employees, or parties in interest, including this affiant.

(Signed)

President, Treasurer, Secretary
Title Fort Wayne Contracting, Inc.

Subscribed and sworn to before me
this 8th day of April, 2015

Patricia Hopkins
Title

My commission expires: 2/18/2019

PATRICIA HOPKINS
Notary Public - Michigan
Macomb County
My Commission Expires Feb 18, 2019
Acting in the County of Wayne

NON-COLLUSION AFFIDAVIT OF PRIME BIDDER

State of Michigan

SS

County of Oakland

Robert Fenner being first duly sworn, deposes and says that:

1. He is Estimating Manager of
(owner, partner, officer, representative, or agent)
Ajax Paving Industries, Inc., the bidder that has submitted the attached bid,

2. He is fully informed respecting the preparation and contents of the attached bid and of all pertinent circumstances respecting such bid;

3. Such a bid is genuine and is not a collusive or sham bid;

4. Neither the said bidder nor any of its officers, partners, owners, agents, representatives, employees or parties in interest, including this affiant, has in any way colluded, conspired, connived or agreed, directly or indirectly with any other bidder, firm or person to submit a collusive or sham bid in connection with the contract for which the attached bid has been submitted or to refrain from bidding in connection with such contract, or has in any manner, directly or indirectly, sought by agreement or collusion or communication or conference with any other bidder, firm or person to fix the price or prices in the attached bid or any other bidder, or to fix any overhead, profit or cost element of the bid price or the bid price of any other bidder, or to secure through any collusion, conspiracy, connivance or unlawful agreement any advantage against the City of Detroit or any person interested in the proposed contract; and

5. The price or prices quoted in the attached bid are fair and proper and are not tainted by any collusion, conspiracy, connivance or unlawful agreement on the part of the bidder or any of its agents, representatives, owners, employees, or parties in interest, including this affiant.

Robert Fenner
(Signed)

Estimating Manager
Title

Subscribed and sworn to before me
this 8th day of April, 2015

Judy Marie Filipiak
Title

My commission expires: 11/3/2016

JUDY MARIE FILIPIAK
Notary Public, State of Michigan
County of Macomb
My Commission Expires Nov. 03, 2016
Acting in the County of Oakland

AGREEMENT

CONTRACT TITLE	CONTRACT NUMBER
HMA RESURFACING AND MISCELLANEOUS CONSTRUCTION ON ALTER BETWEEN CHANDLER PARK & E. JEFFERSON, MACK BETWEEN I-75 & RIOPELLE, E. SEVEN MILE ROAD BETWEEN I-75 & CONANT AND HARPER BETWEEN CADIEUX & I-94 CROSSOVER FOR THE DEPARTMENT OF PUBLIC WORKS	**PW- 6971** **CPO NO: 2905959** **SPO NO: 2905960** NUMBER OF BULLETINS **1**
PARTY OF THE FIRST PART (The City) City of Detroit, Michigan, a municipal corporation acting through the **DIRECTOR, DEPARTMENT OF PUBLIC WORKS** **2 WOODWARD AVENUE** **802 COLEMAN A. YOUNG MUNICIPAL CENTER** **DETROIT, MICHIGAN 48226**	DATE OF AGREEMENT
PARTY OF THE SECOND PART (Contractor) **FORT WAYNE CONTRACTING, INC/AJAX PAVING INDUSTRIES, INC., A JOINT VENTURE** **320 EAST SEVEN MILE ROAD** **DETROIT, MICHIGAN 48203-2022**	
CONTRACT PRICE **THREE MILLION, NINETY SEVEN THOUSAND, TWO HUNDRED TWO AND 52/100 DOLLARS $3,097,202.52**	

Agreement made on the date as shown above, between the above named party of the first part, City of Detroit, hereinafter called the City, and the above named party of the second part, hereinafter called the Contractor.

Whereas, the City, by due advertisement, has invited proposals for doing the work hereinafter specified; and the Contractor has submitted a proposal which has been accepted, and the City Council has approved this Contract, the parties hereto do hereby, in consideration of the mutual covenants hereinafter contained, agree with each other as follows:

1. THE CONTRACT

The Contract Documents are composed of the individual parts as named by title in Article 2 of the Standard Instructions to Bidders, including the number of Bulletins above indicated issued by the City prior to the receipt of bids, and together form the Contract and are as fully a part of the Contract as if fully herein repeated. In case any question arises as to the identity of the Contract Documents or any individual parts thereof, the City Engineer shall identify them.

2. WORK INCLUDED

The work included consists of that contained and described in the proposal for the Contract above named by title and number.

3. TIME PROVISIONS

The Contractor shall begin work under this Contract at the time stipulated in the written notice of the City Engineer, acting for the City, issued in accordance with the provisions of the Article, "Time of Starting and Completing Work", in the Special Notice to Bidders. Time being of the essence of this Contract, the Contractor shall thereafter prosecute the work diligently so as to assure the completion of the entire work not later than the time prescribed therefor, or the date to which the time of completion may have been extended pursuant to the provisions of the Article, "Delays and Extension of Time", of the General Conditions. The Contractor shall, if necessary to complete the work within such time, work nights, Sundays and holidays without any change in the Contract price.

4. LIQUIDATED DAMAGES

The Contractor guarantees that he can and will complete the work within the time limit stated in the Contract Documents, or within the time as extended as provided elsewhere in the Contract Documents. Inasmuch as the damage and loss to the City which will result from the failure of the Contractor to complete the work within the stipulated time, will be most difficult or impossible of accurate determination, it is mutually agreed that the damages to the City for such delay and failure on the part of the Contractor shall be liquidated in the amount stated in the Article, "Liquidated Damages", in the Special Notice to Bidders, for each and every calendar day by which the Contractor shall fail to complete the work or any part thereof within the provisions hereof, and such liquidated damages shall not be considered as a penalty .

The City will deduct and retain out of any money due or to become due hereunder the amount of the liquidated damages, and in case those amounts are less than the amount of liquidated damages the Contractor shall pay the difference upon demand of the City.

AGREEMENT

5. THE CONTRACT PRICE

For the Contractor's complete performance of the work under the Contract, the City will pay, and the Contractor agrees to accept, in full compensation therefor, the Contract price above stated, subject to the terms and conditions thereof. Nothing herein contained shall be construed, or be permitted to operate, as any restriction upon the power granted to the Common Council by the City Charter to audit and allow all accounts chargeable against the City.

A. ***Lump Sum Price Contract:*** Where the accepted Proposal was on a lump sum price basis, the Contract price above stated is subject to adjustments, if any, due to the additional cost or credits for work ordered by the City to be added or omitted in accordance with Article 19, "Changes or Modification of Contract", of the General Conditions.

B. ***Unit Price Contract:*** Where the accepted Proposal was on a unit price basis, the Contract price above stated is subject to such additions and deductions as may be necessary to conform to the actual quantities of the several items or classes of work performed at the unit prices stated in the accepted Proposal, and also, is subject to adjustments, if any, due to the additional cost or credits for work ordered by the City to be added or omitted in accordance with Article 19, "Changes or Modification of Contract", of the General Conditions.

6. DETAILED ESTIMATE

When required by the Special Notice To Bidders, the Contractor shall within 14 days after the execution of this Contract, submit a Detailed Estimate to the City Engineer for his approval on forms provided by the City Engineer, giving a breakdown of his price bid, or of lump sum bid for items of the Contract, showing for each major operation to be performed under the Contract, the individual items of work, with units, quantities, unit prices and total cost. The sum of the total cost of the individual items shall be equal to the total Contract price.

The Detailed Estimate, when approved by the City Engineer, shall be considered and become a part of the Contract. The approved Detailed Estimate may be used by the Engineer as a basis for preparing his estimates for progress payments and to provide unit prices for which extra work may be done and for which work ordered omitted may be deducted. No progress payments will be made until the Detailed Estimate has been approved by the City Engineer.

7. PROGRESS PAYMENTS

When the Special Notice to Bidders so provides, in order to assist the Contractor to prosecute the work advantageously, the City will make progress payments to the Contractor

The Engineer will from time to time as the work progresses, but usually not more often than once a month, prepare and certify an estimate that, in his judgement, represents the quantity and fair value of the work done by the Contractor, including such extra work performed as was ordered in writing by the City.

When the Detailed Estimate is required, the Engineer may use the prices contained in such Detailed Estimate. In case any of the said prices do not, in the judgement of the Engineer, truly represent the actual relative costs of different parts of the work performed, the Engineer may prepare a new schedule of prices for use in preparing the estimate.

When the Special Notice to Bidders so provides, the Engineer may also include in the estimate the value of non-perishable materials, fixtures and equipment which, in the judgement of the Engineer, are suitably stored on the site on the last day of the estimate period. The value of such items shall not exceed the actual net cost to the Contractor as substantiated by invoices or other factual information deemed satisfactory by the Engineer.

After Approval of the Engineer's certified estimate by the City Officer, above named as acting for the City, a copy of the Engineer's estimate will be furnished the Contractor and the City will make payment to the Contractor as follows:

Unless otherwise provided in the Special Notice to Bidders, the City will retain from each progress payment, 10 percent of the total amount earned as stated in the Engineer's estimate until the total amount so retained shall equal 5 percent of the Contract price above stated. The City will then pay to the Contractor the amount so computed, less the aggregate of any and all amounts previously paid the Contractor, except that the City may further retain from any progress payment any deductions authorized to be made by the City under the terms of this Contract or by law.

The Engineer may withhold the preparation of a progress estimate whenever, in his judgement, the lack of proper progress by the Contractor so warrants. It is mutually understood by, and agreed between the parties hereto, that no progress payment by the City in itself shall be construed as evidence of satisfactory progress by the Contractor, or as evidence of performance of this Contract either in whole or in part, or construed to be an acceptance by the City of defective work or improper materials.

8. ACCEPTANCE AND FINAL PAYMENT

A. Contractor's Notification of Completion: When the Contractor considers all work required of him in the performance of this Contract, including any and all changes in the work ordered in writing by the City, to be complete and ready for final inspection, he shall so notify the Engineer in writing.

B. Contractor's Affidavits and Guarantees: The Contractor shall file with the Engineer as a condition precedent to final payment, the following:

a) An affidavit, on forms provided by the Engineer, that all payrolls, material bills and all other indebtedness incurred by him in connection with the work have been paid;

b) A release from the surety company on the Labor and Material Bond, in event that any claims have been previously filed pursuant to such bond, consenting to the final payment notwithstanding such filed claims;

c) Written guarantees and/or warranty bonds or certificates of inspection as may be specifically required under the terms of the Contract.

AGREEMENT

C. *Verified Statement of Claims:* The Contractor must also submit a final verified statement of any and all alleged unliquidated claims against the City in any way connected with or arising out of this Contract, including those as to which details may have been furnished pursuant to Articles 21 and 22 of the General Conditions, setting forth with respect to each such claim the total amount thereof, the various items of labor and materials included therein, and the alleged value of each such item; and if the alleged unliquidated claim be one of delay, the alleged clause of each such delay, the period or periods of time, giving the dates when the Contractor claims the performance of the work, or a particular part thereof, was delayed, and an itemized statement and breakdown of the amount claimed for each such delay. With reference to each such claim, the City shall have the same right to inspect, and make extracts or copies of, the Contractor's books, vouchers, records etc., as is referred to in said Articles 21 and 22. Nothing contained in this Article is intended to or shall relieve the Contractor from the obligation of giving timely notice of claims pursuant to said Articles 21 and 22. The Contractor is warned that unless such claims are completely set forth as herein required, the Contractor upon acceptance of the final payment, pursuant to "F" herein, will have waived any such claims.

D. *Engineer's Inspection and Final Estimate*: Upon receipt of the Contractor's written notification, the Engineer will promptly thereafter make such inspection.

If the Engineer finds the entire work not fully completed or portions thereof not acceptable under the terms of the Contract, he will so notify the Contractor in writing, itemizing what work is uncompleted and/or unacceptable. The Contractor shall then promptly complete and/or correct the work so itemized, and again notify the Engineer as required in "A" above.

When the Engineer finds the entire work fully completed and acceptable under the terms of the Contract and the Contract fully performed, he will prepare and certify a final estimate as to the whole amount of the work done by the Contractor and the value thereof under and according to the terms of the Contract, and will determine the unpaid balance due hereunder other than the amount of alleged unliquidated claims. Any and all prior progress estimates prepared by the Engineer under the provisions of Article 7 herein, upon which progress payments were made, being merely estimates made to determine the amount of progress payments to enable the Contractor to prosecute the work more advantageously, shall be subject to correction in the certified final estimate

E. *Approval of Final Payment*: Upon approval of the Engineer's certified final estimate by the City Officer, a copy of the approved final estimate will be furnished the Contractor. The City Officer will certify to the Common Council that all work required of the Contractor in the performance of the Contract has been completed and accepted by said City Officer under the terms and conditions thereof, and the total value of such work. After audit and allowance by the Common Council, the total amount of the value of the work done will be paid to the Contractor by the City, less the total amounts previously paid on any or all progress payments when such were allowed and paid, less any deductions authorized to be made by the City under the terms of the Contract or by law. Such final payment shall be final and conclusive upon the Contractor.

F. *Acceptance of Final Payment:* The acceptance by the Contractor, or by anyone claiming by or through him, of the final payment, based on the Engineer's final estimate and the amount allowed by the Common Council, whether such payment be made pursuant to any judgement of any court, or otherwise, shall constitute and operate as a release to the City from any and all claims of and liability to the Contractor for anything theretofore done or furnished for or relating to or arising out of this Contract, and for any prior act, neglect or default on the part of the City or any of its officers, employees or agents, excepting only a claim against the City for amounts deducted or retained in accordance with the terms and provisions of this Contract or by law, and excepting a claim, not otherwise waived, which is contained in the verified statement filed by the Contractor pursuant to "C" above.

The Contractor is warned that his acceptance of the final payment with any reservation either orally or in writing, purporting to reserve claims other than those herein specifically excepted from the operation of this Article, or those deducted by the City from the final estimate as certified to by the Engineer, shall not be effective to reserve such claims, anything stated to the Contractor orally or in writing by any officer, employee or agent of the City to the contrary notwithstanding.

Should the Contractor refuse to accept the final payment as tendered by the City, it shall constitute a waiver of any right to interest thereon.

G. *Substantial Completion Payment*: When the work, in the judgement of the Engineer, has been substantially but not entirely completed, and full completion thereof is materially delayed through no fault of the Contractor, and the Engineer so certifies, the City may, upon certificate of such substantial completion made by the City Officer, make payment to the Contractor of any part or all of the balance due under the Contract, including amounts retained from any previous progress payments, less the value of work still to be done, as the Engineer shall judge to be fair and equitable, for that portion of the work certified as substantially complete and accepted, and less any deductions authorized to be made by the City under the terms of the Contract or by law. Such payment shall be made under the terms and conditions governing final payment.

AGREEMENT

IN WITNESS WHEREOF, the *City* and the *Contractor*, by and through their authorized officers and representatives, have executed this *Contract* as of the date first above written.

WITNESSES:

1. _____ (Signature)

Patricia Hopkins (Print Name)

2. _____ (Signature)

Sharon Davis (Print Name)

CONTRACTOR:

BY _____ (Signature)

Christopher R. Honore (Print Name)

ITS: President-Fort Wayne Contracting, Inc. (Title)

Robert Farina
Est. Manager-Ajax Paving Industries, Inc.

WITNESSES:

1. _____ (Signature)

Pameta Parker (Print Name)

2. _____ (Signature)

Stephen F. Scott (Print Name)

CITY OF DETROIT – DPW

BY _____ (Signature)

Ron Brundidge

ITS: **DIRECTOR**

PW- 6971 **HMA Resurfacing**
CPO NO: 2905959
SPO NO: 2905960

THIS CONTRACT WAS APPROVED BY THE CITY COUNCIL ON:

JUN 09 2015

FRC APPROVAL JUN 22 2015

_____
Purchasing Director Date

APPROVED BY LAW DEPARTMENT PURSUANT TO §6-406 OF THE CHARTER OF THE CITY OF DETROIT

_____ 5-18-15
Corporation Counsel Date

THIS CONTRACT IS NOT VALID OR AUTHORIZED UNTIL APPROVED BY RESOLUTION OF THE CITY COUNCIL AND SIGNED BY THE PURCHASING DIRECTOR.

CITY ACKNOWLEDGMENT

STATE OF Michigan)

)SS.

COUNTY OF Wayne)

The foregoing contract was acknowledged before me the 4th day of May, **2015** by

Ron Brundidge, the Director of the Department of Public Works

on behalf of the City.

PW- 6971 **HMA Resurfacing**
CPO NO: 2905959
SPO NO: 2905960

Notary Public, County of: _____

Signature of Notary

State of: _____

My commission expires: _____

JOSE T ABRAHAM
Notary Public, State of Michigan
County of Macomb
My Commission Expires Nov. 28, 2016
Acting in the County of Wayne

CORPORATE ACKNOWLEDGMENT

STATE OF Michigan)
)SS.
COUNTY OF Wayne)

The foregoing contract was acknowledged before me the 27th day of April, 2015

by Christopher R. Honore and Robert Farina,
(Name of person who signed the contract)

the President-Fort Wayne Contracting, Inc./Estimating Manager-Ajax Paving Industries, Inc.
(Title of person who signed the contract as it appears on the contract)

Fort Wayne Contracting, Inc/Ajax Paving Industries, Inc a joint venture
(Complete name of the corporation)

on behalf of the Corporation.

PW- 6971 HMA Resurfacing
CPO NO: 2905959
SPO NO: 2905960

Notary Public,
County of: Macomb

Signature of Notary

State of: Michigan

My commission expires: 02/18/2019

PATRICIA HOPKINS
Notary Public - Michigan
Macomb County
My Commission Expires Feb 18, 2019
Acting in the County of Wayne

CORPORATION CERTIFICATE OF AUTHORITY

I Christopher R. Honore, Corporate Secretary of Fort Wayne Contracting, Inc.

I, James A. Jacob, Corporate Secretary of Ajax Paving Industries, Inc.

I, _____, Corporate Secretary of
(name of corporate secretary)

Fort Wayne Contracting, Inc./Ajax Paving Industries, Inc., a joint venture,

a for profit corporation (the "Corporation"), **DO HEREBY CERTIFY** that the following is a true and correct excerpt from the minutes of the meeting of the Board of Directors duly called and held on Fort Wayne-09/15/14/ Ajax 03/31/15 and that the same is now in full force and effect:
(date of meeting)

> "**RESOLVED**, that the Chairman, the President, each Vice President, the Treasurer, and the Secretary and each of them, is authorized to execute and deliver, in the name of and on behalf of the Corporation and under its corporate seal or otherwise, any agreement or other instrument or document ('Contract') in connection with any matter or transaction that shall have been duly approved; and the execution and delivery of any Contract by any of the aforementioned officers shall be conclusive evidence of such approval."

I FURTHER CERTIFY that

_____	is Chairman
Christopher R. Honore-Fort Wayne Contracting/Mark Johnston-Ajax Paving Industries	is President
David R. Cowper, P.E.-Ajax Paving Industries, Inc.	is (are) Vice President(s),
Christopher R. Honore-Fort Wayne Contracting/ James A. Jacob-Ajax Paving Industries	is Treasurer,
Christopher R. Honore-Fort Wayne Contracting/ James A. Jacob-Ajax Paving Industries	is Secretary,
_____	is Executive Director, and
Robert Farina	is Estimating Manager.

I FURTHER CERTIFY that any of the aforementioned officers or employees of the Corporation are authorized to execute and commit the Corporation to the conditions, obligations, stipulations and undertakings contained in **CPO No. 2905959, PW-6971, HMA Resurfacing on Alter, Mack, E. Seven Mile Road & Harper between Fort Wayne Contracting, Inc/Ajax Paving Industries, Inc.,** a joint venture **and the City of Detroit, acting through the Director of the Department of Public Works** and that all necessary corporate approvals have been obtained in relationship thereto.

IN WITNESS THEREOF, I have set my hand this 27th day of April, 20 15.

CORPORATE SEAL
(if any)

_____
Corporate Secretary-Fort Wayne Contracting, Inc.

_____
Corporate Secretary -Ajax Paving Industries, Inc.

PLEASE NOTE THAT THE PERSON WHO SIGNS THE CONTRACT ON BEHALF OF YOUR CORPORATION MUST BE ONE OF THE INDIVIDUALS LISTED ABOVE AS A PERSON AUTHORIZED TO EXECUTE CONTRACTS IN THE NAME OF AND ON BEHALF OF THE CORPORATION.

JOINT VENTURE AGREEMENT

This Joint Venture Agreement ("Agreement") is made and entered into by and between Fort Wayne Contracting, Inc. ("FWC"), a Michigan corporation whose principal office is located at 320 E. Seven Mile Rd., Detroit, MI 48203, and Ajax Paving Industries, Inc. ("Ajax"), a Michigan corporation whose principal office is located at 830 Kirts Blvd., Ste. 100, Troy, MI 48084 on this 8th day of April, 2015.

IN CONSIDERATION of the mutual promises and undertakings hereinafter specified, the receipt and sufficiency of which is hereby acknowledged, FWC and Ajax AGREE AS FOLLOWS:

1. JOINT VENTURE

FWC and Ajax hereby agree to a contractual joint venture subject to the terms and conditions set forth in this Agreement (the "Joint Venture"). The name and business address of the Joint Venture solely for the purpose set forth below shall be:

"Fort Wayne Contracting, Inc./Ajax Paving Industries, Inc., Joint Venture"
320 E. Seven Mile Rd.
Detroit, MI 48203

2. PURPOSE, SCOPE AND TERM OF JOINT VENTURE

(A) PURPOSE

The sole and exclusive purpose of the Joint Venture is to bid upon and enter into a contract (the "Contract") with the City of Detroit (the "Owner") relating to that certain Proposal for PW-6971 concerning certain 5.0 miles of HMA Resurfacing and Miscellaneous Construction on Alter between Chandler Park & E. Jefferson, Mack between I-75 & Conant and Harper between Cadieux & I-94 Crossover for the Department of Public Works (the "Project") and to do all things reasonably incident to the full performance of the Contract and construction of the Project. The Joint Venture shall have no other purpose and shall not create any partnership or other permanent relationship between FWC and Ajax. Further, the Joint Venture shall not preclude either FWC or Ajax from pursuing their own separate business so long as they do so in their own names and assume full and exclusive responsibility with respect to such separate business activities and no party to this Agreement shall have any right to participate in the results of any other activities or operations conducted by the other

ii. Provide at least fifty-one (51) percent of the total Contract performance, responsibility and project management;

iii. Receive at least fifty-one (51) percent of the total remuneration from the Contract; and

iv. Share in profits and losses.

FWC and Ajax, pursuant to this Agreement, bind themselves jointly and severally to execute the Contract for the Project if awarded by the Owner and to fully perform the requirements of the Contract when executed.

(B) SELF-PERFORMED WORK

FWC and Ajax will be subcontractors to the Joint Venture. The work on the Project consists of work that will be performed by FWC and Ajax entirely with their own labor, equipment, materials and supplies or through second tier subcontractors (hereinafter referred to as "Self-Performed Work").

i. FWC's Self-Performed Work is designated on the attached Exhibit A, which constitutes at least fifty one percent (51%) of the total contract performance and remuneration based upon the design quantities of the work specified by the City in the bidding documents and the bid prices submitted or to be submitted for that work by the Joint Venture. FWC shall be solely and completely responsible for all materials, supplies, labor, equipment, permits, licenses, taxes and other facilities required, and all expenses incurred to perform its items of Self Performed Work in accordance with the contract specifications and schedule. FWC shall receive compensation for the performance of this work in accordance with the contract value ascribed to such work in FWC's subcontract with the Joint Venture, which value shall not be less than fifty one percent (51%) of the total contract value based upon bid quantities and bid prices. FWC shall be solely responsible for any and all losses incurred or damages sustained in the performance of its Self Performed Work.

It is the express intent and agreement of FWC and Ajax that the Joint Venture shall not be responsible for, nor be obligated to subsidize or otherwise defray any losses sustained by Ajax, for whatever reason, arising out of or relating to Ajax's Self-Performed Work, nor shall the Joint Venture be entitled to any share of the profits, including any extraordinary or windfall profits, which may result from changes in Ajax's Self-Performed Work.

(C) NO INDIVIDUAL AUTHORITY TO BIND JOINT VENTURE

Neither Ajax nor FWC shall have the individual authority to bind or obligate the other with respect to any matter whatsoever arising out of or relating to the Project or any other matter nor shall either FWC or Ajax have the individual authority to bind the Joint Venture to any obligation, contract, arrangement, agreement, release, waiver, accommodation, loan, guaranty or other matter of whatsoever nature.

(D) INDEMNIFICATION

Notwithstanding the joint and several obligation of FWC and Ajax for performance of the Contract recited in subparagraph (A) above, FWC and Ajax shall each indemnify, hold harmless and defend the other and their respective employees, shareholders, officers, directors, agents and affiliates from and against any and all claims, demands, suits, causes of action, proceedings, costs, damages, judgments, expense (including reasonable actual attorney and expert witness and consultant fees), interest, and liabilities of whatsoever nature (each a "Claim"), whether arising before or after completion of the work under the Contract, which result from, relate to or arise out of: (i) that party's Self-Performed Work; (ii) that party's unauthorized acts on behalf of or in the name of the Joint Venture or the other party; (iii) injury or death of any person employed by that party or acting under that party's direction, supervision or control, unless such injury or death is due to the sole negligence of the party to be indemnified; (iv) that party's failure to fully pay or discharge any debt, expense or cost attributable to that party's Self-Performed Work; (v) indemnification of any surety pertaining in any way to that party's Self Performed Work; (vi) damage to or destruction of property or to wholly or partially completed portions of the Work (including trespass, nuisance and deprivation of the use of real property) provided that such damage or destruction is due

indemnified party upon the indemnified party's reasonable request for such consultation from time to time with respect to any proceeding, audit or assessment. No compromise or settlement of any Claim may be effected by the indemnifying party without the indemnified party's written consent (that will not be unreasonably withheld or delayed) unless (A) there is no finding or admission of any violation of legal requirements or any violation of the rights of the indemnified party or its employees, shareholders, officers, directors, agents and affiliates and no effect on any other claims that may be made against the indemnified party, and (B) the sole relief provided is monetary damages that are paid in full by the indemnifying party.

With respect to the defense of any claims asserted against a party to be indemnified hereunder, the party being indemnified shall have the right to reasonably approve defense counsel selected by the indemnifying party.

The rights of Ajax and FWC relating to indemnification under this Agreement shall survive the termination of this Agreement.

4. MANAGEMENT

(A) EXECUTIVE COMMITTEE

The affairs of the Joint Venture shall be managed by an Executive Committee consisting of one representative from each of FWC and Ajax. FWC hereby appoints Christopher R. Honre as its representative and Ajax hereby appoints Clarence Jones as its representative. FWC and Ajax represent and warrant, each to the other, that its appointed representative is duly authorized to act on its behalf; that the actions of its representative shall, in the absence of fraudulent or dishonest conduct, be conclusively binding upon the company; and that it's representative shall serve on the Executive Committee at its sole expense without expectation of compensation from the Joint Venture.

All administrative and managerial functions of the Joint Venture shall be the responsibility of the Executive Committee and all decisions, agreements, undertakings, subcontracts, contract modifications and other matters concerning the Joint Venture's performance of the Contract shall be by unanimous action of the Executive Committee; provided, however, decisions undertaken in the ordinary course

accordance with generally accepted accounting principals on a cash basis and limited to receipts of funds by the Joint Venture from the Owner under the contract and disbursement of those funds in accordance with this Agreement. Ajax shall administer and maintain the Joint Venture's books of account without charge to the Joint Venture for such service and shall provide FWC with copies of the monthly account statements and records. The accounts of the Joint Venture shall be open to both FWC and Ajax for inspection at all reasonable times. Expenses for regulatory fees, bank fees, audits by outside examiners (unanimously approved by the Executive Committee in accordance with this Agreement), and any required additional computer programs exclusively dedicated to the Joint Venture shall be deemed as ordinary expense of the Joint Venture and paid directly by the Joint Venture or reimbursed to the party incurring such expenses on behalf of the Joint Venture pursuant to that party's reimbursement invoice. Any expense or series of related expenses that are in excess of $1,000 must be unanimously approved by the Executive Committee

(B) AUDITS

The Executive Committee may direct that periodic audits of the Joint Venture's books of account be conducted. In that event, the party not responsible for maintaining the books of account shall designate the independent accounting firm to conduct such audits subject to the reasonable approval of the other party.

(C) FINAL ACCOUNTING AND DISTRIBUTION

Upon completion of the Contract, final acceptance of the work by the Owner and release of final payment including all retention, a final accounting shall be made of all receipts, costs, expenses, accounts and underlying project records pertaining to the performance of the Contract. If directed by the Executive Committee, an independent audit (by an auditor selected by the party not responsible for maintaining the Joint Venture's books of account) of the final accounting shall be conducted.

After payment of all debts and expenses relating to performance of the Contract in accordance with the provisions of paragraph 6, the Executive Committee shall make a final distribution to FWC and Ajax of all remaining funds in the Joint Venture's accounts. All Joint Venture profits, interest earned on Joint Venture funds and

The Joint Venture will furnish 100% Performance and Payment Bonds to the Owner issued jointly and severally by the Joint Venture and the sureties for FWC and Ajax and shall equally share the expense of such bonds. In the event of any claims upon said bonds, FWC and Ajax shall immediately and fully hold harmless, defend and indemnify the other and its corresponding surety from and against any and all claims, demands, suits, damages, expenses, and costs (including attorney fees), arising out of or relating to that party's Self-Performed Work.

Unless otherwise unanimously agreed to by the Executive Committee, any reimbursement of bond costs shall be distributed in equal shares to FWC and Ajax.

11. INSURANCE

11.1 REQUIRED COVERAGES

Furnishing the required Builders Risk (if required by the Owner), General Liability, Excess Liability Umbrella, and other insurance coverages specified in the Contract, excepting Workers Compensation coverages which shall be the individual expense of the parties, shall be an expense of the Joint Venture and shared equally by FWC and Ajax. Both FWC and Ajax shall be named additional insureds on all such policies, excepting Workers Compensation insurance policies, and all such policies shall contain provisions prohibiting cancellation of coverage without at least thirty (30) days written notice of such cancellation being given by the insurance carrier(s) to all named insureds.

11.2 DEDUCTIBLES

Full payment of deductibles on claims under the General Liability coverages shall be the responsibility of the party (FWC or Ajax) who performed the Self-Performed Work to which the claim related. If the claim does not relate to Self-Performed Work, full payment of deductibles on claims under the General Liability coverages shall be the responsibility of the party (FWC or Ajax) determined to be more than ninety percent (90%) at fault for the occurrence giving rise to the claim. For purposes of this determination the term "party" includes subcontractors, suppliers and others working for or at the direction of the party.

Should the claim not relate to Self-Performed Work and neither party (FWC or Ajax) be more than ninety percent (90%) at fault for the occurrence giving rise

(A) Fails, refuses or becomes unable to perform the terms of this Agreement or its work upon the Project in accordance with the requirements of the Contract;

(B) Becomes unable to discharge its financial obligations with respect to this Agreement or its work under its subcontract with the Joint Venture; is adjudged insolvent; makes an assignment for the benefit of creditors; suffers the appointment of a receiver; commences or, allows to be commenced against it, any petition in bankruptcy or under any other law or statute for the relief of debtors and such condition is not cured, discharged or vacated within thirty (30) days.

Upon written notice of the occurrence of a default, the defaulting party shall have five (5) days from the date of the other party's written notice of default to fully cure and remedy such default; provided further, that no cure period shall be required for a breach which by its nature cannot be cured. If the default is not fully cured within said five (5) day period, then, effective upon the date of the Notice of Default, the other party at its option and in addition to any other rights and remedies it may have; may enforce the following:

(A) The defaulting party shall be prohibited from any further involvement in the management of the affairs of the Joint Venture.

(B) The defaulting party shall cease further performance or attempted performance of the work on the Project and shall not remove any equipment, materials or supplies from the Project premises or materials stockpile sites.

(C) The defaulting party shall be deemed to have fully surrendered and assigned all of its right, title and interest in the Joint Venture, this Agreement, all Joint Venture assets, contracts and accounts, and its subcontract with the Joint Venture, including all earnings thereunder, to the other party and the other party may, without objection or interference by the defaulting party, take possession of all of the defaulting party's equipment, materials and supplies for purposes of continuing and

of performance of this Agreement is deemed by the City to be inconsistent with or in violation of the above cited requirements, the parties agree that they shall mutually make such amendments to this Agreement so as to be in full compliance with such requirements.

16. ASSIGNMENT; THIRD PARTY BENEFICIARIES

Except for the "assignment upon default provisions" contained in paragraph 13, neither party may assign, transfer, or voluntarily or involuntarily encumber its interest, rights or obligations under this Agreement without the prior written consent of the other party. Nothing expressed or referred to in this Agreement will be construed to give any person other than the parties to this Agreement any legal or equitable right, remedy or claim under or with respect to this Agreement or any provision of this Agreement.

17. GOVERNING LAW

This Agreement and the respective rights and obligations of FWC and Ajax hereunder shall be governed by the laws of the State of Michigan without regard to conflicts of law principles.

18. COUNTERPARTS

This Agreement may be executed in one or more counterparts, all of which taken together will constitute one instrument. Any signature page delivered via facsimile, e-mail or other electronic or digital means shall be binding to the same extent as an original signature page.

IN WITNESS WHEREOF, the parties hereto have executed this Agreement as of the date first above written.

FORT WAYNE CONTRACTING, INC.

By: _____

Name: Christopher R. Honore

Its: President

AJAX PAVING INDUSTRIES, INC.

By: _____

Name: Robert Farina

Its: Estimating Manager

Exhibit A
PW-6971
4.1 Miles of HMA Resurfacinng Misc Constructio
Fort Wayne Contracting, Inc./Ajax Paving Industries, Inc., Joint Venture

30	Pavt Repr, Rem, Modified	350.00	Syd.	$	20.00	$	7,000.00
31	Detectable Warning Surface Tile, Modified	1,620.00	Ft.	$	84.25	$	136,485.00
32	Sidewalk Ramp, ADA, Modified	29,520.00	Sft.	$	4.00	$	118,080.00
33	Sidewalk, Conc, 4 inch, Modified	29,097.00	Sft.	$	3.40	$	98,929.80
34	Sidewalk, Conc 6 inch, Modified	4,476.00	Sft.	$	3.60	$	16,113.60
35	Sidewalk, Conc Repl, 4 inch with Tree Roots, Modified	1,584.00	Sft.	$	5.10	$	8,078.40
36	Sidewalk, Conc Repl, 6 inch with Tree Roots, Modified	1,080.00	Sft.	$	5.50	$	5,940.00
37	Pavt Mrkg, Ovly Cold Plastic, 6 inch, Crosswalk	1,159.00	Ft.	$	2.50	$	2,897.50
38	Pavt Mrkg, Ovly Cold Plastic, 12 inch, Crosswalk	1,050.00	Ft.	$	5.95	$	6,247.50
39	Pavt Mrkg, Ovly Cold Plastic, 18 inch, Stop Bar	502.00	Ft.	$	8.25	$	4,141.50
40	Pavt Mrkg, Ovly Cold Plastic, Lt Turn Arrow Sym	4.00	each	$	155.00	$	620.00
	Subtotal P. 1b, Items 21-40					**$**	**2,092,051.86**
41	Pavt Mrkg, Ovly Cold Plastic, Only	9.00	each	$	165.00	$	1,485.00
42	Pavt Mrkg, Ovly Cold Plastic, Thru Arrow Sym	1.00	each	$	155.00	$	155.00
43	Pavt Mrkg, Ovly Cold Plastic, Rt Turn Arrow Sym	4.00	each	$	120.00	$	480.00
44	Pavt Mrkg, Sprayable Thermopl, 4 inch, White	1,415.00	Ft.	$	0.39	$	551.85
45	Pavt Mrkg, Sprayable Thermopl, 4 inch, Yellow	27,910.00	Ft.	$	0.39	$	10,884.90
46	Pavt Mrkg, Thermopl, 6 inch, Crosswalk	3,243.00	Ft.	$	2.50	$	8,107.50
47	Pavt Mrkg, Thermopl, 18 inch, Stop Bar	729.00	Ft.	$	8.25	$	6,014.25
48	Pavt Mrkg, Modified Urethane, 6 inch, Cross Hatching, Yellow	350.00	Ft.	$	2.75	$	962.50
49	Recessing Pav't Mrkg, 6 inch	4,402.00	Ft.	$	1.25	$	5,502.50
50	Recessing Pav't Mrkg, 12 inch	1,050.00	Ft.	$	2.45	$	2,572.50
51	Recessing Pav't Mrkg, 18 inch	1,231.00	Ft.	$	2.95	$	3,631.45
52	Barricade, Type III, High Intensity, Double Sided, Lighted Furn	16.00	each	$	75.00	$	1,200.00
53	Barricade, Type III, High Intensity, Double Sided, Lighted Oper	16.00	each	$	0.01	$	0.16
54	Lighted Arrow, Type C, Furn	8.00	each	$	350.00	$	2,800.00
55	Lighted Arrow, Type C, Furn	8.00	each	$	0.01	$	0.08
56	Minor Traf Devices	1.00	ls	$	149,775.00	$	149,775.00
57	Plastic Drum, High Intensity, Furn	426.00	each	$	15.00	$	6,390.00
58	Plastic Drum, High Intensity, Oper	426.00	each	$	0.01	$	4.26
59	Sign, Type B, Temp, Prismatic, Furn	1,600.00	sft	$	4.00	$	6,400.00
60	Sign, Type B, Temp, Prismatic, Oper	1,600.00	sft	$	0.01	$	16.00

CONTRACT FORMS
FOR
PW-6971

EQUALIZATION REQUIREMENTS

(REVISED 30-OCT-01)

1. **Ordinances/Definitions.** Copies of related ordinances, executive orders, and definitions of all terms. "Detroit-Based Business," "Minority" and "Resident" are available upon request by contacting the Office of the City Clerk at Room 200 Coleman A. Young Municipal Center, Detroit, MI 48226, 313.224.3270. Vendors requesting a copy of the Purchasing Ordinance effective 16-APR-00 should refer to Ordinance #3199 when requesting additional information.

   The following definitions shall apply to the Formal Bid document and all attachments:

   City - The City of Detroit acting through the Purchasing Director

   CCD - Contract Compliance Division of the City of Detroit's Finance Department

   Bidder - The person or entity so named in the Formal Bid Document, or their authorized representative.

EFFECTIVE APRIL 16, 2000 REQUIREMENTS FOR RECEIVING EQUALIZATION CREDIT HAVE BEEN REVISED. Please review the following definitions and requirements for certification carefully.

Detroit-Based Business (DBB) – means a business which pays City income taxes on the business's net profits and pays City property taxes on 1) a plant or office and equipment which are ordinarily required for the furnishing of the goods or the performance of the services required by the contract and referred to in the application for certification as Detroit-based business or on 2) other real or personal property in the City equivalent in value to such plant or office and equipment, for not less than one (1) taxable year immediately prior to the date of the application for certification. In addition, a Detroit-based business shall satisfy three (3) of the following eight (8) criteria:

1. Provide verification that an existing inventory of the product(s) which the business offers to the City is physically located at a City site.
2. Provide verfication of the ability of the business to service/repair product(s) to be sold to the City at a City site.
3. Provide verfication that the business has an adequate number of employees based at its City site to perform the services indicated in its application for certification.
4. Headquarters I located within the City
5. Provide references, licenses or other means of verifying to the City that the services the firm offers have been provided at a City site for at least one (1) year prior to the date of application.

6. Provide documentation that the majority (51%) of the firms employees working at its City site are Detroit residents.
7. Provide verification that the firm has physical resources and ability to provide the services indicated in its application for certification at a location with the City.
8. 51% of full-time employees including chief officer and managers regularly work and conduct business in the City.

The firm submitting the bid shall submit with their bid proof of certification as a Detroit Based Business.

Headquarters – Means the place where the chief executive officer and highest-level managerial employees of a business have their offices and perform their management function.

Micro Business Concern (MBC) – Means a business, which is one (1) of the following:

1. A manufacturing business which has no more than fifty (50) employees; or
2. A general construction business which has annual gross receipts of not more than one million seven hundred thousand dollars ($1,700,000.00); or
3. A specialty construction business which has annual gross receipts of not more than seven hundred thousand dollars ($700,000.00)
4. A wholesale business which has no more than ten (10) full-time employees; or
5. A retail business which has annual gross receipts of not more than five hundred thousand dollars ($500,000.00); or
6. A service business, other than professional services, which has annual gross receipts of not more than five hundred thousand dollars ($500,000.00)

Note: A business which is an affiliate or a subsidiary of any entity that is not eligible for certification as a micro business concern **shall not be certified** as a micro business concern.

Small Business Concern (SBC) – Means a business which:

1. Has been in existence and operating for at least one (1) year prior to the date of application for certification as a small business concern; and
2. Does not meet the definition of a micro business concern, as defined in this division, and
3. Is one (1) of the following:

    a. A manufacturing business which, for the three (3) fiscal years preceding the date of application for certification has provided full-time employment to not more than five hundred (500) persons; or

b. A general construction business which, for the three (3) fiscal years preceding the date of application for certification, has average annual gross receipts of not more than seventeen million dollars ($17,000,00.); or
c. A specialty construction business whose average annual gross receipts have not exceeded seven million dollars ($7,000,000.00) in the three (3) fiscal years preceding the date of application for certification; or
d. A wholesale business which, for three (3) fiscal years preceding the date of application for certification, has provided full-time employment to not more than one hundred (100) persons; or
e. A retail business which, for the three (3) fiscal years preceding the date of application for certification, has average annual gross receipts of not more than five million dollars ($5,000,000.00); or
f. A service business, other than professional, which, for the three (3) fiscal years preceding the date of application for certification. Has average gross receipts of not more than five million dollars ($5,000,000.00) or
g. A professional services business which for the three (3) fiscal years preceding the date of application for certification has had average gross receipts or not more than three million dollars ($3,000,000.00)

Note: A business which is an affiliate or subsidiary of any entity that is not eligible for certification as a small business **shall not** be certified as a small business.

Detroit-Based Small Business – Any business which meets the definitions of Detroit-based business and small business concern as certified by the City of Detroit Human Rights Department prior to bid due date. The firm submitting the bid shall submit with their bid proof of certification as a Detroit-Based Small Business.

Detroit Based Micro Business Concern (DBMBC) – Means a business which meets the definitions of Detroit-based business concern and a micro business concern. The firm submitting the bid shall fill out completely and have notarized and submit with their bid the *Affidavit of Eligiblity for Equalization Credit* in addition to furnishing proof of certification as a Detroit Based Business in order to receive equalization credit as a Detroit-Based Micro Business Concern.

Detroit Resident Business (DRB) – Means any business which employs a minimum of four (4) employees, at least fifty-one (51%) percent of which are City residents. If your firm qualifies to receive equalization credit as a Detroit Resident Business then the *Affidavit of Eligibiity for Equalization* Credit must be filled out completely, notarized, and returned with your bid.

Detroit Based Business w/Headquarters in Detroit – Any business which meets the definition of Detroit Based and Headquarters. The firm submitting the bid shall fill out completely and have notarized and submit with their bid the *Affidavit of Eligiblity for Equalization Credit* in addition to furnishing proof of certification as a Detroit Based Business in order to receive equalization credit as a Detroit-Based Business w/Headquarters in Detroit.

Joint Venture – Means a joint venture of separate firms, one of which is a DBB, DBSB, DRB or DBMBC, which has been created to perform a specific contract, and is evidenced by a written agreement which provides at minimum that the DBB, DBSB, DRB, or DBMBC:

1. Is substantially included in all phases of the contract including, but not limited to, bidding and staffing;
2. Provides at least fifty-one percent (51%) of the total performance, responsibility, and project management of a specific job;
3. Receives at least fifty-one (51%) of the total remuneration from a specific contract; and
4. Shares profits and losses

Mentor Venture – Means a joint venture of separate firms, one of which is a DBB, DBSB, DRB or DBMBC, which has been created to perform a specific contract, and is evidenced by a written agreement which provides at minimum that the DBB, DBSB, DRB, or DBMBC:

1. Is substantially included in all phases of the contract, including, but not limited to, bidding and staffing:
2. Provides at least thirty (30%) of the total performance, responsibility, and project management of a specific job;
3. Receives at least thirty percent (30%) of the total remuneration from a specific contract; and
4. Shares in profits and losses

Categories which require certification must be certified by the City of Detroit Human Rights Department at time of bid submission. If a vendor(s) is not certified at the time of bid submission then equalization credit shall not be applied. For information regarding Certification call 313.224.4950. Failure to submit proper documentation with bid response may result in equalization credit not being applied.

Vendors are ***strongly*** encouraged to make application for certification for all applicable categories. The certification process is lengthy and involved. Applications are closely scrutinized to determine eligibility of firms. Applications are processed in order of receipt.

PROOF OF ELIBILITY TO RECEIVE EQUALIZATION CREDIT MUST BE SUBMITTED WITH EACH AND EVERY BID SUBMITTED TO THE CITY OF DETROIT.

1.0 Eligible Bidders. An "X" below indicates the classification of bidders that the City has determined to be eligible to compete for this contract.

1.1 Competition for this Contract is open to all qualified bidders. ( )

1.2 Competition for this Contract is restricted per Ordinance No. 52-H to Detroit-Based Businesses. ( )

2.0 **Subcontractor Utilization Requirements.** The City has determined that _____% of the total Contract amount shall be subcontract to MBE's who have obtained certification from the Contract Compliance Division (CCD) prior to bid due date. ( )

3.0 **Minority and Resident Hiring.** (Executive Order No. 22) The worker hours on this Contract shall be performed by no less than 50% bona fide City residents, no less than 25% minorities and at least 5% women. ( )

ALL INFORMATION PROVIDED IN RESPONSE TO THE INVITATION FOR BID IS SUBJECT TO VERFICATION AND ACCEPTANCE BY THE CITY OF DETROIT. IF IT IS FOUND THAT INFORMATION SUBMITTED IS NOT VALID THE VENDOR MAY BE SUBJECT TO BEING PLACED IN DEFAULT AND/OR BID REJECTION AS DETERMINED BY THE CITY OF DETROIT PURCHASING DIRECTOR.

EQUALIZATION ELIGIBILITY FORM

In accordance with Ordinance No. 31-99, any Detroit based firm shall be deemed a better bid than the bid of any competing firm which is not Detroit-based, whenever the bid of such competing firm shall be equal to or higher than the bid of the Detroit-based firm after the appropriate equalization percentage credit from the Equalization Allowance Table has been applied to the bid of the Detroit-based firm. **NOTE:** ***IT IS THE VENDOR'S RESPONSIBILITY TO COMPLETE THIS FORM, PROVIDE ALL NECESSARY DOCUMENTATION AND RETURN IT WITH YOUR BID. FAILURE TO DO SO MAY RESULT IN EQUALIZATION NOT BEING APPLIED.***

Company Name: Fort Wayne Contracting, Inc. CPO # **2905959**

A vendor qualifies for equalization credit as per section 18-5-2 of the purchasing ordinance as follows:

Vendor to check all categories which apply*

- [X] **Detroit Based Business** (as certified by the City of Detroit Human Rights Department prior to bid due date. Proof of certification must be submitted with each and every bid response.)
- [X] **Detroit Based Business with Headquarters in Detroit** (as certified by completion of the affidavit attached to bid documents and proof of certification as a Detroit Based Business prior to bid opening. The affidavit must be completed and certification returned with each and every bid for consideration)
- [X] **Detroit Resident Business** (as certified by completion of the affidavit attached to bid documents. The affidavit must be completed and returned with each and every bid for consideration)
- [X] **Detroit Based Small Business** (as demonstrated by furnishing proof certification by the City of Detroit Human Rights Department. Proof of certification must be submitted with each and every bid for consideration.)
- [ ] **Detroit Based Micro Business Concern** (as certified by completion of the affidavit attached to bid and proof of certification as a Detroit Based Business. The affidavit and certification must be completed and returned each and every bid for consideration)
- [X] **Joint Venture OR** [ ] **Mentor Venture** (You may only select one. One of the parties to the joint or mentor venture must be a certified Detroit Based Business prior to bid due date in order to receive equalization credit as a joint or mentor venture. Proof of certification by the City of Detroit Human Rights Department along with a copy of the Joint or Mentor Venture agreement between the parties involved is required.)

*The information submitted to substantiate Equalization Eligibility is subject to verification and acceptance by the City. Should it be found that the vendor is not eligible to receive equalization credit it will not be applied. Should it be found that information submitted has been falsified the vendor may be placed in Default by the City for up to a three year period at the discretion of the City of Detroit Finance Department – Purchasing Division.

TABLE I

Equalization Allowance for Detroit-based business and/or Detroit Resident Business

DOLLAR VALUE	DETROIT BASED	DETROIT RESIDENT
Up to $10,000.00	5%	5%
$10,000.01 to $100,000.00	4%	4%
$100,000.01 to $500,000.00	3%	3%
$500,000.01 and over	2%	2%
Detroit Based Business w/Headquarters in Detroit	3%	

TABLE II

***Equalization allowance for Detroit Based Small Business, Detroit Based Micro Business, Joint Venture, Mentor Venture:**

Category	Equalization Percentage
Detroit Based Small Business	1%
Detroit Based Micro Business Concern	2%
Joint Venture	2%
Mentor Venture	1%

AFFIDAVIT OF ELIGIBILITY FOR EQUALIZATION CREDIT
(Detroit Resident Business/Detroit Based Business w/Headquarters in Detroit/Detroit Based Micro Business)

THIS AFFIDAVIT MUST BE COMPLETED, NOTARIZED AND SUBMITTED WITH EACH AND EVERY BID RESPONSE FOR CONSIDERATION

The undersigned hereby swears or affirms that all statements made with respect to eligibility for the provision of goods and/or services on the above named vendor are true and correct to the best of my knowledge. The undersigned further attests that its information provided is valid as of the date of bid submission.

Instructions: This affidavit should be filled out by firms eligible to receive equalization credit as any of the following: 1) Detroit Resident Business 2) Detroit Based Business w/Headquarters in Detroit 3) Detroit Based Micro Business. Initial each section for which the firm is eligible to receive credit and provide any information the applicable section(s) requires. Make sure that the form is filled out completely, notarized, and included with your bid response. **Note: This is a two-sided form. Both sides must be filled out completely.**

_____ **Detroit Based Micro Business**

Type of Business:
☐ **Manufacturing** ☐ **Retail** ☐ **General Construction**
☐ **Wholesale** ☐ **Service**

Number of Employees _____

Amount of Annual Gross Receipts $_____

THIS AFFIDAVIT IS A TWO SIDED FORM BOTH SIDES MUST BE COMPLETED IN ORDER TO BE CONSIDERED FOR EQUALIZATION CREDIT FOR CATEGORIES REFERENCED ON THIS FORM

PW-6971 CPO# 2905959

X **Detroit Resident Business**

Total number of persons employed by the firm (including all full-time & part-time, owners, officers, managers, and support staff both professional & non-professional is 16.

Total number of employees who are residents of the City of Detroit is: 9. Percentage of employees who are residents of the City of Detroit is 56 %

The undersigned further swears or affirms that the following documents have been presented by all Detroit employees and will be maintained y the DRB vendor for a period of three (3) years upon completion of the contract bid upon. One (1) document from Group A or two (2) documents from Group B are to be submitted upon request by the City:
Group A: 1) Michigan Driver's License 2) Michigan I.D. Card 3) Prior Year City of Detroit Resident Income Tax Return
Group B: 1) W-4 Forms 2. Voter Registration Card 3) Current utility bill with the employee's name and Detroit street address indicated thereon. 4) Affidavit from neighbor or other disinterested party.

X **Detroit-Based Business w/Headquarter in Detroit**

Phone No. of Headquarters 313-368-3400
320 E. Seven Mile Rd, Detroit, MI 48203
Street Address **City/State/Zip**

Names of Chief Executive Officer and High Level Managerial employees who have offices and perform management functions in Detroit.

Name	Title
Christopher R. Nerore	President

Detroit Business Certification Program

FY 2013 - 2014

Certificate of Approval

This is to certify the business below has met all requirements set forth by the Human Rights Department as

Detroit Headquartered Business (DHB),
Detroit Small Business (DSB), and
Minority-Owned Business Enterprise (MBE)

commencing **May 23, 2014** expiring on **May 23, 2015.**

Fort Wayne Contracting, Inc.

HUMAN RIGHTS DEPARTMENT

Patricia L. Ford
Business Certification Specialist

City of Detroit
Mike Duggan, Mayor

NOTICE OF ENACTMENT OF ORDINANCE
TO: THE CITIZENS OF DETROIT
(On January 21, 2004, the City of Detroit adopted the following Ordinance)

ORDINANCE NO. 01-04

CHAPTER 18
ARTICLE V

TO PROVIDE PREVAILING WAGE AND FRINGE BENEFIT RATES REQUIRED FOR CITY PROJECTS. AN ORDINANCE to amend Chapter 18, Article V, of the 1984 Detroit City Code, Division 4. Prevailing Wage and Fringe Benefit Rates Required for City Project, by removing existing and adding new language to Section 18-5-60, titled Definitions and Section 18-5-63, titled Requirement that a copy of prevailing wages be posted by contractor and subcontractors. Repealing existing sections and adding new sections titled Section 18-5-64 Complaint Process, Section 18-5-65, Requirement for investigation of complaint, Section 18-5-66 Termination of contract for Failure to pay; liability of contract and securities, Section 18-5-67, Conditions for tax abatement and Section 18-5-68 Penalties.

IT IS HEREBY ORDAINED BY THE PEOPLE OF THE CITY OF DETROIT THAT:

Section 1. That Chapter 18 of the 1984 Detroit City Code, Chapter 18, Article V, of the 1984 Detroit City Code, Division 4. Prevailing Wage and Fringe Benefit Rates Required for City Project, by removing and adding new language as follows:

Sec. 18-5-60. Definitions.
For the purpose of sections 18-5-60 through 18-5-66, the following words and phrases shall have the meaning ascribed to them by this section:

(a) Construction mechanic shall mean a skilled or unskilled mechanic, laborer worker, helper, assistant, or apprentice working on a "city project", but shall not include executive, administrative, professional, office or custodial employees.
(b) City project shall mean a public works construction project that is one hundred thousand dollars ($100,000.00) or more. Such a "city project" shall include new construction, alteration, repair, installation, painting, decorating, completion, demolition, conditioning, reconditioning, or improvement of public buildings, work, or roads authorized by a "contracting agent". For purposes of this division "city project" includes the contracts and subcontracts entered into by the "contracting agent" and the bidder.
(c) Contracting agent shall mean any designee, officer, board or commission of the city, or a city institution supported in whole or in part by city funds, authorized to enter into a contract for a "city project" or to perform a "city project" by the direct employment of labor.
(d) Designee means a public official acting on behalf of the Finance Director.
(e) Agencies means any department, office, authority, commission, quasi-public entity, multi member body, or other organization of city government.

Sec 18-5-61. Requirement for an express term regarding a minimum rate of wages.

Every contract executed between a contracting agent and a successful bidder as contractor, and entered into pursuant to advertisement and invitation to bid for the city project which requires or involves the employment of construction mechanics, except those subject to the jurisdiction of the City of Detroit civil service commission, and which is financed in whole or in part by the city, but excluding those projects covered by the Federal Davis-Bacon Act or the State Prevailing Wage Act (Act 166, P.A. 1965, MCLA 408.551 et seq.; MSA 17.256(1) et seq.) shall contain an express term that the rates of wages and fringe benefits to be paid to each class of mechanics by the bidder and all of his subcontractor shall be not less than the wage and fringe benefits rates prevailing in the city as established by the most recent survey of the Michigan Department of Labor for prevailing wage determination under Act 166, P.A. 1965 (Act 166, P.A. 1965), MCLA 408.551 et. seq., MSA 17.256 (1) et seq.). Should a prevailing wage determination survey for the city be concluded during the life of a successful bidder's contract and/or his subcontracts covered by this ordinance, the rates of wages and fringe benefits that are the minimum to be paid each class of mechanic shall be appropriately adjusted according to this most recent survey. Any such adjustments that require an amendment to the contract shall be effective upon approval by the city council.

Sec. 18-5-62. Public Works Contracts, Prevailing Wage Affidavit Required.

All executed public works contract by the City of Detroit and/or its agencies as prescribed in Section 18-5-60 (a) and 18-5-60 (b) shall include a copy of the Prevailing Wage Ordinance and a copy of the current prevailing wages and fringes as prescribed in Section 18-5-61. The executed contracts shall included a signed affidavit acknowledging that the prevailing wages shall be paid under terms of the contract by the contractor and subcontractors throughout the term of the contract.

Sec. 18-5-63. Requirement that a schedule of rates is to be part of specifications for city projects.

A schedule of the prevailing wage and fringe benefits for all classes of construction mechanics called for in a contract shall be made a part of the specifications for the work to be performed and shall be printed in the bidding forms where work is to be done by contract.

Sec. 18-5-64. Requirement that a copy of prevailing wages be posted by contractors and subcontractors.

Every contractor and subcontractor shall keep posted in a conspicuous place on the construction site a copy of all prevailing wage and fringe rates prescribed by the contractor. Each new employee shall be provided a copy of the prevailing wage and fringe rates document when he or she begins work. In addition, the contractor must supply additional copies of the wage and fringe rates document as request by employees. The contractor shall keep accurate records showing the name and occupation of and actual wages and benefits paid to each construction mechanic employed by the contractor in connection with said contract. This record shall be made available immediately on demand for inspection by the contracting agent of the city.

Section 18-5-65. Conditions for tax abatement.

All firms, companies, and businesses seeking tax abatement from the city shall as a condition of receiving that tax abatement agree to include prevailing wage schedules and payment of prevailing wages, as defined by this ordinance, on all construction work performed on the property for which the tax abatement is granted.

Sec. 18-5-66. Complaint process.

A person impacted by a violation of this ordinance may file a complaint with the [sic] city Finance director or his/her designee. If the complaint is not resolved to the complainant's [sic] satisfaction within the ninety day period, the complainant [sic] or his or her representative may bring an action in the appropriate to court enforce this ordinance. The court shall award reasonable attorneys fees and cost to a person who prevails in an enforcement action.

Sec. 18-5-67 Development of Complaint Procedures; Requirement for Investigation of complaint.

The Finance Department shall create appropriate policies, procedures, and documents necessary to implement the complaint procedure required by this ordinance. The Finance department shall submit these polices, procedures and documents to the City Council for review. The Finance Director or his/her designee shall be responsible for the enforcement of this complaint process. The city shall designate an individual or individual(s) who shall investigate any and all complaints or violations of this ordinance. A contract under investigation shall shall provide the Finance Director with weekly payroll records setting forth the name, address, telephone number, classification, wage rate and fringe benefit package of all employees who work on the contract, including the employees of contractors subcontractors and agents. Such weekly payroll records must include the required information for all city contracts and all other contracts on which the employee worked during the week in which the employee worked on the contract. Theses records will reflect the individual time each employee worked on the contract. These records will reflect the individual time each employee worked on project for each day of the project. Such records shall also set forth the total number of hours of overtime credited to each such employee for each day and week and the amount of overtime pay received for the week. The records shall set forth the full weekly wages earned by each employee and the actual hourly wage rate to the employee. The city shall begin the investigation within 3 days of receipt of a complaint and shall provide a written determination within 10 days of beginning its investigation with a copy of the determination to the complainant and the City Council, as to whether or not a violation has occurred.

Sec. 18-5-68. Termination of contract for failure to pay; liability of contractor and sureties.

The city of its agent, by written notice to the contractor and the sureties of the contractor known to the contracting agent, shall terminate the contractor's right to proceed with the contract for which less than the prevailing rates or wages and fringe benefits have been or will be paid and shall proceed to complete the contract by separate agreement with another contractor. The city or its

contracting agent shall withhold payment for work done by a contractor found to be in violation of not paying Prevailing Wages until liabilities of unpaid wages are paid to the effected workers under the contract. If a contractor fails to pay the liabilities for unpaid wages to the effected workers the City shall use the contractors withheld payments to secure a contractor to complete the work.

Sec 18-5-69, Penalties.

Any person, firm or corporation or combination thereof, including officers of any contracting agent, who violated the provision of this ordinance is guilty of a misdemeanor. In addition, any contractor found to be in violation of this division by any contracting agent shall be barred for two (2) years from bidding on any city project. In addition, if the contractor who is found in violation of the provision of this ordinance by the Finance Director in one contract and has additional contracts held by this contractor must be evaluated immediately to determine their compliance with this prevailing wage ordinance.

Any contractor or subcontractor who violate the prevailing wage requirement shall pay to each employee affected the amount of the deficiency, for each day of the violation . Violation of the ordinance shall also result in a penalty paid to the city in them amount of $200.00 per a violation for each day the violation has occurred. The city shall withhold payments to the employer in such amounts as are necessary to effect the payment provided in this paragraph.

Section 2. All ordinances, or parts of ordinances, which conflict with this ordinance are repealed.

Section 3. This ordinance is declared necessary for the preservation of the public peace, health safety, and welfare of the People of the City of Detroit.

Section 4. If any clause, phrase, section or word of this ordinance is declared invalid or unconstitutional by a court of competent jurisdiction, such invalidity or unconstitutionally shall not affect any of the remaining clauses, paragraphs, phrases sections, sentences or words of this ordinance.

Section 5. This ordinance shall become effective on the sixtieth (60th) day after enactment in accordance with Section 4-115 of the 1997 Detroit City Charter.

(J.C.C.p.) November 12, 2003
Passed: January 7, 2004
Published: January 29, 2004
Effective: March 29, 2004

JACKIE L. CURRIE
City Clerk

SLAVERY ERA RECORDS AND INSURANCE DISCLOSURE ORDINANCE

NOTICE OF ENACTMENT OF ORDINANCE
TO: THE PEOPLE OF DETROIT, MICHIGAN
(On June 23, 2004, the City of Detroit adopted the following Ordinance)

ORDINANCE NO. 20-04
CHAPTER 18
ARTICLE V

AN ORDINANCE TO AMEND CHAPTER 18, ARTICLE V, OF THE 1984 DETROIT CITY CODE, TITLED "PURCHASES AND SUPPLIES." BY ADDING DIVISION 7. TITLED "SLAVERY ERA RECORDS AND INSURANCE DISCLOSURE." WHICH SHALL CONSIST OF SECTIONS 18-5-91 THROUGH 18-5-93, TO REQUIRE, AS PART OF THE CONTRACTING PROCESS, THAT EACH CONTRACTOR WITH WHICH THE CITY ENTERS INTO A CONTRACT SEARCH ITS RECORDS AND THOSE OF ANY PREDECESSOR ENTITY, AND SUBMIT AN AFFIDAVIT DISCLOSING ANY RECORDS WITHIN ITS POSSESSION OR KNOWLEDGE RELATING TO INVESTMENTS OR PROFITS FROM THE SLAVE INDUSTRY, INCLUDING INSURANCE POLICIES ISSUED TO SLAVE HOLDERS THAT PROVIDED COVERAGE FOR INJURY, DEATH OR OTHER LOSS RELATED TO SLAVES WHO WERE HELD DURING THE SLAVERY ERA IN THE UNITED STATES.

AN ORDINANCE to amend Chapter 18, Article V, of the 1984 Detroit City Code, titled "Purchases and Supplies." by adding Division 7. titled "Slavery Era Records and Insurance Disclosure." which shall consist of Sections 18-5-91 through 18-5-93, to require, as part of the contracting process, that each contractor with which the City enters into a contract search its records and those of any predecessor entity, and submit an affidavit disclosing any records within its possession or knowledge relation to investments or profits from the slave industry, including insurance policies issued to slave holders that provided coverage for injury, death or other loss related slaves who were held during the slavery era in the United States.

IT IS HEREBY ORDAINED BY THE PEOPLE OF THE CITY OF DETROIT THAT:

Section 1. Chapter 18, Article V, of the 1984 Detroit City Code, titled "Purchases and Supplies." by adding Division 7. titled "Slavery Era Records and Insurance Disclosure." which shall consist of Sections 18-5-91 through 18-5-93, to read as follows:

DIVISION 7. SLAVERY ERA RECORDS AND INSURANCE DISCLOSURE.

Sec. 18-5-91. Scope.

(a) This division shall apply to each contractor for goods or services with which the City enters into a contract, whether or not the contract is subject to competitive bid.

(b) Each contactor shall be responsible for searching and disclosing records of the entity which proposes to enter into a contract with the City as well as all records of any predecessor entity that are within the possession or knowledge of the contractor regarding records of Investments or profits from the slave Industry, including records of any insurance policies issued to slave holders which provided coverage for injury, death, or other loss related to slaves who were held during the slavery era in the United States.

SLAVERY ERA RECORDS AND INSURANCE DISCLOSURE ORDINANCE

Sec. 18-5-92. Affidavit of disclosure required.

(a) As part of its contract package, each contractor with which the City enters into a contract shall submit to the Finance Department Purchasing Division prior to the submission to City Council or approval of such contract, an affidavit that discloses the information indicated in Subsection (b) and (c) of this section. The affidavit shall be on a form provided by the Finance Department Purchasing Division.

(b) The affidavit shall verify that the contractor has searched all records of the entity which proposes to enter into a contract with the City, as well as all records of any predecessor entity, that are within the possession or knowledge of the contractor regarding records of investments or profits from the slave industry, including records of any insurance policies issued to slave holders which provided coverage for injury, death, or other loss related to slaves who were held during the slavery era in the United states.

(c) The affidavit shall disclose ay information discovered during the search regarding investments or profits from slavery or slave holder insurance policies which accrued to the current entity or to any predecessor entity, including the names of any slaves or slave holders that are described in such records or are otherwise within the knowledge of the contractor.

Sec 18-5-93. Voidability of contract.

(a) Failure to comply with this division shall render the contract voidable by the City.

(b) A determination to void the contract for failure to comply with this division shall be made by the Director of the Finance Department at any time after reviewing, or become aware of, information which indicates that a contractor has failed to comply with this division.

Sec 18-5-94—18-5-100. Reserved.

Section 2. All ordinances, or parts of ordinances, that conflict with this ordinance are repealed.

Section 3. This ordinance is declared necessary for the preservation of the public peace, health, safety, and welfare of the People of the City of Detroit.

Section 4. In the event that this ordinance is passed by a two-thirds majority of City Council Members serving, it shall be given immediate effect and shall become effective upon publication in accordance with Section 4-116 of the 1997 Detroit City Charter. Where this ordinance is passed by less than a two-thirds (2/3) majority of City Council Members serving, it shall become effective no later that thirty (30) days after enactment, or on the first business day thereafter in accordance with Section 4-115 of the 1997 Detroit City Charter.

(J.C.C.p.)	May 5, 2004
Passed:	June 23, 2004
Published:	July 19, 2004
Effective:	July 19, 2004

JACKIE L. CURRIE
City Clerk

CITY OF DETROIT
EXECUTIVE OFFICE

COLEMAN A. YOUNG MUNICIPAL CENTER
2 WOODWARD AVENUE., SUITE 1126
DETROIT, MICHIGAN 48226
PHONE 313 • 224 • 400
FAX 313 • 224 • 4128
www.ci.detroit.mi.us

EXECUTIVE ORDER NO. 2007-1

TO: **ALL BOARDS, COMMISSIONS, DEPARTMENT DIRECTORS, CITY COUNCIL MEMBERS, AND THE CITY CLERK**

SUBJECT **UTILIZATION OF DETROIT RESIDENTS ON PUBLICLY-FUNDED CONSTRUCTION PROJECTS**

DATE: **SEPTEMBER 10, 2007**

It is the policy of this Administration to encourage and maximize the utilization of Detroit residents on publicly-funded construction projects. An important component of the economic revitalization of Detroit is the employment of Detroit residents.

This Executive Order directs City departments and agencies to implement specific residency requirements on all construction projects funded, in whole or in part, by the City and applies to those funded by state or federal funds to the extent permitted by law.

All City of Detroit project construction contracts shall provide that at least **fifty-one percent (51%)** of the workforce must be bona-fide Detroit residents. In addition, Detroit residents shall perform **fifty-one percent (51%)** of the hours worked on the project. Workforce and project hours shall include work performed by Detroit residents in the various job categories: officials and managers; supervisors and forepersons, professionals, technicians, sales workers, office and clerical, skilled trades, craft workers, operators, laborers, service workers, apprentices, and on-the-job training positions.

Failure to meet the Detroit resident workforce requirement, including project hours, will result in the following monthly financial penalties.

Financial Penalties

Detroit Resident Hours	Monthly Recruitment Fee
45%-50%	3%
40%-44%	7%
30%-39%	10%
0% - 29%	15%

Developers, general contractors, prime contractors and sub-contractors are required to pass the requirements of this Executive Order down to all lower-tier contractors. However, it is the sole responsibility of the entity contracting with the City of Detroit to require all of their contractors to comply with the City of Detroit requirement to utilize fifty-one percent (51%) of Detroit residents on construction projects. In reaching the Detroit residency requirement, local union halls may be utilized, however, the City of Detroit Workforce Development Department and/or its designee shall be the first source utilized to recruit and hire Detroit residents; where Detroit residents are unavailable at the local union halls. **Failure to meet the requirements of this Executive Order will constitute a breach of contract and may result in immediate termination of the contract.**

At the option of the City of Detroit, any developer, general contractor, prime contractor, sub-contractor, or lower-tier contractor that is deficient in the utilization of Detroit residents may be barred from doing business with the City of Detroit for one (1) year. In addition, the City of Detroit reserves the right to re-bid the contract, in whole or in part, and/or hire its own workforce to complete the work.

All construction contracts, construction contract amendments, change orders, and extensions shall include the terms of this Executive Order. The Human Rights Department shall have the responsibility for preparing administrative guidelines, monitoring, and enforcing the provisions of this Executive Order

This Executive Order supersedes Executive Order No. 22 issued by Mayor Coleman A. Young on August 29, 1983. This executive order is effective November 1, 2007.

Signed: Kwame M. Kilpatrick
Mayor

Hiring Policy Compliance

Summary

The Detroit City Council has approved Ordinance No. 29-11; Detroit City Code of 1984 Section 18-5-81 et *seq*. This ordinance is a revision to the Purchasing Ordinance that relates to the hiring practices of City Contractors. It is commonly referred to as "Ban the Box".

Section 18-5-81 states that it is the purpose of the new ordinance "to ensure that City Contractors afford an individual who is qualified for a position, but has a criminal conviction, the opportunity to apply, and be considered, as an employee needed to fulfill the terms of the contract with the City of Detroit." This applies to all contracts over **$25,000** that the City enters into, whether for goods or services, and whether or not subject to competitive bidding (although contracts entered into pursuant to a co-op arrangement are exempt). The revision to the Purchasing Ordinance requires that all Contractors shall not inquire about or consider the criminal conviction of their applicants until the prospective employer interviews or determines that the applicant is qualified. This revision does allow contractors to conduct criminal history background checks for positions where there is a statutory duty to perform a pre-employment screening, for example, a child care specialist position in a day care center. However, these exemptions should be verified through the Administration of the Purchasing Division or the City of Detroit Law Department, rather than presumed.

Contractors are responsible to ensure that their subcontractors comply with this policy. Should the contractor solicit any subcontracts, they must notify their subcontractors that there is a joint obligation. The City may, upon request, require documentation of any subcontract. The Hiring Policy Compliance has been incorporated with the other City required Clearances and Affidavits. **The executed Affidavit and a Copy of the Contractor's Application** will be required with all bid recommendations and contracts effective July 1, 2012.

Prior to the submission of a contract to City Council, Purchasing will require that the signed, "Hiring Policy Compliance Affidavit" must be a part of the contract package. This oath states the Contractor will affirm that their policies are in compliance with the requirements and that **a copy of the application form used to hire employees must be attached to the bid response**. A bid response without this affidavit and attached application will be deemed non-responsive, and will not be evaluated. The only exception will be grant funded contracts that include procurement regulations and procedures that prohibit this procedure.

Certified Payroll

PW-6971

Certified Payrolls

Weekly certified payrolls covering the contractor's and subcontractor's· workforce shall be submitted to the engineer on all contracts. Certified payrolls are required for all covered laborer and mechanic work regardless of the contracting method used such as subcontract, purchase order, invoice, or other contractual arrangement. Certified payroll information may be submitted in any format provided that all information requested on form **WH-347** is included, and the compliance statement has original signatures. This is a USDOL form and a link is available on the MDOT Web site at http://mdotwasl.mdot.state.mi.us/public/webforms/index.cfm.

Submittal Requirements

The first certified payroll is to be received by the engineer within three weeks from the start of the work for the prime contractor and/or subcontractor(s). The three week period is to allow for processing and review of the certified payrolls by the prime contractor. The first pay estimate can be made prior to the submission of the first certified payrolls. The three week grace period allows the first estimate to be paid in good faith assuming the contractor and subcontractor(s) will submit certified payrolls in a timely manner. Subsequent certified payrolls shall be submitted on a weekly basis thereafter. In certain circumstances, the time frame for submittal of the first payroll is two weeks for shorter duration projects as discussed at the end of the section titled "Notice of Delinquent Certified Payrolls". Certified payroll submissions not meeting the above time requirements will be considered delinquent.

Notice of Delinquent Certified Payroll

When weekly certified payrolls are delinquent as defined above, the engineer is to provide the prime contractor a first written notice of delinquent certified payrolls by certified mail or other method which establishes the date the first notice was received by the prime contractor, with a copy by regular mail to the offending subcontractor. The notice informs the contractor that payment for work is suspended as of the date the certified payrolls became delinquent for the work items of the offending contractor(s). When the pay estimate is generated, the statement "Items withheld-Delinquent payrolls" should be entered in the comments area. In addition, the notice is to state that if certified payrolls remain delinquent after 30 calendar days from receipt of the first notice, noncompliance damages will be assessed retroactive to the date the contractor received the first notice. The damages will be assessed on a calendar day basis until complete and accurate certified payrolls are submitted and are current.

If the certified payrolls continue to be delinquent after 30 calendar days from receipt of the first notice by the prime contractor, the engineer is to implement the actions from the first notice. Concurrently, the engineer is to send the prime contractor a second written notice of delinquent certified payrolls by certified mail or other method which establishes the date the second notice was received by the prime contractor, with a copy by regular mail to the offending" subcontractor. The City Engineer should also receive a copy by regular mail. The notice is to state if the certified payrolls remain delinquent for 30 days from the receipt of the second notice, the engineer will rescind all previous payments for work completed by the offending contractor(s). In addition, the engineer will complete interim Contractor Performance Evaluations for the offending contractor. If certified payrolls have not been received from the contractor after 30 calendar days from receipt of the second notification, the engineer is to implement the actions from the second notice. In all circumstances, the withholding of payments, assessment of noncompliance damages, and rescinded payments are to continue until all delinquent certified payrolls are current, complete and correct.

Certified Payroll

PW-6971

The notification sequence previously described would be as follows:

Initiate Notice	Notice Sequence	Contractor Notice of Action	Allotted Time For Response/ Resolution	If No Response/ Resolution
First payroll has not been received within 3 weeks	First Notice (See Note 1)	Payment is being withheld for offending contractor's work items. Non-payment will continue until complete and accurate payrolls are received. Intent to assess non-compliance damages until all payrolls are complete, accurate and current (See Notes 2 and 3)	30 days from receipt of first notice by the the first prime contractor	Implement actions from the first notice. Send second notice
Payroll remains delinquent 30 days after first notice received by prime contractor	Second Notice (See Note 1)	Intent to rescind all prior payment for the offending contractor's work items. Intent to submit interim Contractor Performance Evaluation(s) for the offending contractor(s). (See Note 2)	30 days from receipt of second notice by the prime contractor	Implement actions from the second notice

Note 1: Notice is to be signed by the engineer and delivered by certified mail or other method which establishes the date received by the prime contractor. The City Engineer is to be copied on the first notice to the prime contractor. The City Engineer and the Director of DPW are to be copied on the second notice to the prime contractor.

Note 2: Prior to generating an estimate on which payment is being withheld or deducted, the following statement will be entered in the comment box: "Items withheld - Delinquent payroll".

Note 3: See Table 1 Schedule of Non-Compliance Damages

Table 1 Schedule of Non-Compliance Damages

Contract/Subcontract/P.O./Invoice Amount	Non-compliance damages per calendar day
$0 to 49,999	$200
50,000 to 99,999	$400
100,000 to 499,999	$600
500,000 to 999,999	$900
1;000,000 to 1,999,999	$1,300
2,000,000 to 4,999,999	$1,550
5,000,000 to 9,999,999	$2,650
10,000,000 and above	$3,000
Trucker	$200

"Contract" amount if offending contractor is the prime contractor. "Subcontract/P.O./Invoice" amount if offending contractor is a subcontractor/vendor.

Certified Payroll

PW-6971

Certified Payroll Status Record

The engineer is to maintain a current (updated weekly) log documenting the submittal status of certified payroll for each contract. The Certified Payroll Status Record (MDOT form 1954) is available for this purpose. The record is to show whether the contractor and/or subcontractor worked during the weekly period, and the date the certified payrolls were received from the prime contractor. In addition, the status record should document the date any notifications are sent to the prime contractor (via certified mail) of delinquencies and/or deficiencies with certified payrolls, and the dates when the revised/corrected certified payrolls were received. All certified payrolls are to be date stamped upon receipt from the prime contractor. The envelope in which the certified payrolls arrive should be attached to the payroll and saved as part of the project file records.

The certified payroll is to include the following information:

- The firm's name and address with the prime or subcontractor(s) identified.
- Payroll number, week ending, project location and contract ID (contract identification).
- The employee's full name and only the last four digits of their social security number. If a contractor or subcontractor submits certified payrolls with complete social security numbers, the engineer is not to take possession of the certified payrolls and will return them to the prime contractor. This is the only instance where certified payrolls are to be returned to the prime contractor. Failure by the contractor or subcontractor to submit certified payrolls with only the last four digits of the social security number shall not change the time frames for the consideration of delinquent and deficient certified payrolls and resulting actions by the engineer.
- Information identifying minority and female employees. The following ethnic code notation is to be used: Black (B), Hispanic (H), Native American Indian or Alaskan Eskimo (N/A), and Asian or Pacific Islander (A). For female use (F).
- The employee's classification and group number. (DBRA Laborer example: LABO0465-001, Group 1)
- Identification of trainees and apprentices, and program levels.
- The employees daily and weekly hours worked in each classification, including actual overtime worked.
- The total weekly hours worked on all jobs (prevailing and non-prevailing wage)
- The basic hourly rate, overtime rate (if applicable) and the method by which fringe benefits are paid (By checking Box(4)(a) approved programs, Box (4)(b) paid in cash, or a combination of the above methods with an explanation in Box (4)(c). If fringe benefits are paid to an approved plan, a detailed breakdown of the type of benefits and hourly dollar values must accompany the first certified payroll. In addition, plan administrator contact information shall be included. If there is a change to the fringe benefits payment after submittal of the first certified payroll, the fringe benefit information must be resubmitted. This information is to be used to verify the benefits being paid are "bona fide" and that the total compensation is in compliance with the required prevailing wage in the contract.
- The itemized deductions - miscellaneous itemized deductions must be explained on the certified payroll. (Space provided after paragraph (1) on the compliance statement)
- The gross job wages paid.
- The gross weekly wages paid for all jobs.
- The net weekly wages paid for all jobs.
- The compliance statement with original signature.

Certified Payroll

PW-6971

Certified Payroll Review

The engineer is to closely review the certified payrolls from the prime contractor and subcontractor(s) that work on the project. Once it is established that a contractor/subcontractor is submitting complete and accurate certified payrolls, subsequent payrolls need to be spot checked during the remainder of the project for that contractor/subcontractor. The review should verify that the information described above is included on the certified payroll. Form 1952, Certified Payroll Review Checklist, is available on MDOT's forms Web site to assist in checking the payrolls for completeness. In addition, the total combination of base wage and fringe benefit reported on the certified payroll should be at least the prevailing wage contained in the wage rate decision in the contract or applicable addendum.

The review should compare information contained in the certified payrolls with information on the Inspectors Daily Reports (IDRs), including number of workers, hours worked, type of work and equipment on the job. It is important that the information is accurately recorded on the IDR each day so the proper review can be completed on the certified payrolls. The review should verify that the appropriate work classifications are reported to support the type of work being done on the job. For example, when concrete curb and gutter is being placed on a job covered by DBRA, there are finishers (cement masons, PLAS0016-016); laborers (form/line setters,LABO0-65-001,Group 6); laborers (unskilled laborers, LABO0465-001, Group 1); and operators (if using a" slipform curb machine, ENGI0324-006, Group 1); Compliance with prevailing wage requirements can only be deterinined once this comparison is made and any inconsistencies are brought to the attention of the contractor.

The rules for payment of· overtime should be considered during the certified payroll review. Overtime rates are a combination of the base rate plus a premium amount. However, there are significant differences between overtime requirements when federal prevailing wages apply and when state prevailing wages apply.

Contracts with State Prevailing Wage:

- The time and one-half rate is stated in the prevailing wage schedule.
- The prevailing wage schedule for each contract will need to be referenced to determine the specific overtime payment requirements." In general, overtime is applied as follows:

  For hours worked in excess of eight hours in a day.
  For most classifications, the contractor may choose to work four tens (4 – 10 hour days) where overtime would be required after the tenth hour in a day and any time worked over forty hours in a week.
  Some classifications require double time in certain situations.
  The classification of iron worker has its own overtime requirements.

Deficient Certified Payroll

During the review, if the weekly certified payrolls are found to be incomplete, inaccurate, or inconsistent with the other project records, they are considered deficient. The engineer is to notify the prime contractor of the deficiencies in writing by certified mail or other method which establishes the date the notice is received by the contractor with a copy by regular mail to any subcontractor(s) that may be involved and the City Engineer.

The notice is to inform the contractor(s) that if the deficiencies are not corrected and revised certified payrolls are not received by the engineer in 30 calendar days from receipt of the notice by the prime contractor, payment for the offending contractor's work items will be withheld until corrected and revised payrolls are received by the engineer. In addition, the notice will state the intent to assess non-compliance damages retroactive to the date the prime received the first notice until all issues are resolved. The offending contractor is to submit revised certified payrolls correcting all deficiencies and/or errors through the prime contractor.

Certified Payroll

PW-6971

If the issues are not resolved within 30 calendar days from the receipt of the first notice, the engineer will implement the action from the first notice. Concurrently, the engineer is to send a second notice to the prime contractor by certified mail or other method which establishes the date the notice was received by the contractor, with a copy by regular mail to any subcontractor(s) that may be involved. The second notice is to state that if corrected and revised certified payrolls are not received within 30 calendar days of the receipt of the second notice by the prime contractor; the engineer will rescind all payments for the offending contractor's work items previously paid. In addition, the notice is to inform the contractor the engineer will complete interim Contractor Performance Evaluations for the offending contractor. The City Engineer and the Director of Public Works are also to receive a copy of the second notice.

If the deficient certified payrolls are not corrected and revised certified payrolls received by the engineer within 30 calendar days of the second notice, the engineer is to implement the actions in the second notice and prepare the appropriate Contractor Performance Evaluations to report the continued non-compliance with prevailing wage requirements.

Assessment of non-compliance damages, withholding of payments, and rescinded payments will continue until all corrected and revised certified payrolls are received by the engineer.

The original certified payrolls submitted by the contractor/subcontractor(s) are to remain in the project files. Do **not** return certified payrolls to the contractor/subcontractor(s), except in the following circumstance. In the event the prime contractor submits certified payrolls containing full social security numbers, the engineer shall not take possession of the payrolls and shall return them to the prime contractor. This is the only instance where certified payrolls are to be returned to the prime contactor. This action is to protect the security of the employee social security numbers. Certified payrolls should **never** be altered, revised, corrected, amended or changed by project personnel (except for the date stamp).

The notification sequence previously described would be as follows:

Initiate Notice	Notice Sequence	Contractor Notice of Action	Allotted Time For Response/ Resolution	If No Response/ Resolution
Payroll deficiencies	First Notice (See Note 1)	Intent to withhold for offending contractor's work items. Intent to assess non-compliance damages from the date the first notice was received by the prime contractor (See Note 3)	30 days from receipt of first notice by the the prime contractor	Implement actions from the first notice. Send second notice
Payroll Issue not resolved 30 days after first notice	Second Notice (See Note 2)	Intent to rescind payment for all work items of offending contractor(s). Intent to submit interim Contractor Performance Evaluations	30 days from receipt of second notice by the prime contractor	Implement actions from the second notice

Note 1: Written notice is to be signed by the engineer and delivered by certified mail or other method which establishes the date the notice was received by the prime contractor. The offending subcontractor(s) and the City Engineer are to be copied by regular mail.

Note 2: Written notice is to be signed by the engineer and delivered by certified mail or other method which establishes the date the notice was received by the prime contractor. In addition, the offending subcontractor(s), the City Engineer, and the Director of the Department of Public Works are to be copied by regular mail.

Note 3: See Table 1 Schedule of Non-Compliance Damages

CLEARANCE NOTIFICATION

Any bidder or vendor may apply for clearance certificates. Before the City can award a contract to a successful bidder, that bidder must obtain and provide clearance certificates to the City of Detroit Purchasing Division.

ALL BIDDERS AND POTENTIAL VENDORS ARE ADVISED TO OBTAIN PRE-APPROVALS UTILIZING THE ATTACHED CLEARANCE REQUEST FORMS SO AS NOT TO DELAY OR JEOPARDIZE CONTRACT AWARD.

Clearance certificates are statements of bidder compliance with applicable City of Detroit Ordinances and are required prior to award of contracts. The clearance certificates must be obtained from each of the following departments and divisions:

1. **Income Tax Division**, Finance Department
   1220 Coleman A. Young Municipal Center
   Detroit, MI 48226
   Telephone: 313-224-3328 or 224-3329

2. **Accounts Receivable Division**, Finance Department
   105 Coleman A. Young Municipal Center
   Detroit, MI 48226
   Telephone: 313-224-4087

FAILURE TO PROVIDE ALL REQUIRED CLEARANCES WITHIN THE TIME ALLOWED MAY RESULT IN THE REJECTION OF QUOTES BIDS AND/OR PROPOSALS.

After the evaluation of quotes, bids or proposals the City will send (via e-mail or by First Class mail to the E-MAIL or MAILING ADDRESS indicated on the signature page of the bid form) notifications to the two lowest responsive and responsible bidders that they must obtain and provide the Purchasing Division with clearance certificates within ten (10) business days after date of request.

The vendor and/or bidder shall be responsible for any mailing delays or failure of the U. S. Postal Service to deliver.

3. **Human Rights Department Affidavit (effective 12/1/2010)** must be completed in its entirety, notarized and submitted with your bid. Failure to submit completed affidavit with your bid will disqualify your bid for non-compliance or will be cause for rejection.

Requirements for Income Tax Clearance

Background. The City of Detroit is authorized to levy an income tax under the Uniform City Income Tax Ordinance (No.900-F) set forth in Chapter 2 of Act 284 of the Public Acts of 1964, known as the "City Income Tax Act." "No bid shall be accepted from or contract awarded to any person who is in arrears to the City..." see Detroit codes: Sec.18-5-13, Sec. 18-10-25 and General Conditions# 28.

What Is An Income Tax Clearance? An approved Income Tax Clearance states that an individual, business or subcontractor seeking employment or contracts with the City of Detroit has complied with all the provisions of the City Income Tax Ordinance. Contractors (individuals, businesses or Subcontractors) cannot be awarded a contract and are not authorized to perform services until they are in compliance with the City Income Tax Ordinance. **The "Request for Income Tax Clearance" form should be submitted 30 days prior to the submission for new bids or renewals of contract extensions. Please e-mail your completed request form (preferably in pdf format) to: IncomeTaxClearance@detroitmi.gov**

Requirements For Individuals. Individuals must file returns and pay income taxes, and not have any unpaid assessments. Detroit residents must file formD-1040(R). If a taxpayer claims a non-resident status, proof will be required (copy of lease, mortgage closing statements, driver's license, voter's registration, etc.). If an individual seeking a tax clearance reside within the City, but claimed dependent status on another person's tax return, or received assistance, proof may be required.

Requirements For Businesses. Businesses must file Corporation (0-1120) or Partnership (0-1065) returns, regardless of net profit or loss. Non-profit organizations are required to file 0-1120 tax return based on non-related income. All employers located in the City or "doing business within the City" must withhold City of Detroit income taxes from employees" compensation. Employers subject to withholding tax must file monthly or quarterly forms 0-941/501, as well as, form DW-3 (Annual Reconciliation) with W2's. All assessments must be paid. New employers must request an Employer's Package and register with the City by completing and submitting an Employer's Withholding Registration form 055-4. Contractors must supply a list of subcontractors with federal identification numbers or social security numbers. Contractors must also supply the federal identification numbers used for their leased employees.

Income Tax Clearance Denials. Income Tax Clearances are denied based on one or more of the following reasons:

1. Missing withholding payments, DW-3 Annual Reconciliation with W2's,
2. Unpaid assessments
3. Missing tax returns

Related data regarding taxpayers is confidential, therefore, reasons for denial are given only to the taxpayer or authorized representative with power of attorney. Taxpayers with denied clearances may visit our office to obtain information about their account or to submit requested information.

Appointments are not necessary. For additional information contact the Clearance Section at 313-224-3328 or 313-224-3329. Our office is located in the Coleman A. Young Municipal Center, 2 Woodward Avenue, Suite 1220. Office hours are 8:00 a.m. to 4:00 p.m., Monday through Friday.

VENDOR REQUEST FOR INCOME TAX CLEARANCE

REQUESTING DEPARTMENT/DIVISION: _____

E-MAIL ADDRESS: _____

CONTACT NAME: _____ PHONE: _____ FAX: _____

Type of Clearance: **New** **Renewal** (Please submit 30 days prior to submitting bid or expiration date)

Date:

A. **To:**
City of Detroit
Income Tax Division
Coleman A. Young Municipal Center
2 Woodward Avenue, Suite 1220
Detroit, MI 48226

Phone: 313-224-3328 or 313-224-3329
Fax: 313-224-4588

For:
Individual or Company Name: _____
Address: _____
City _____
State, Zip Code: _____

Telephone #: _____ Fax #: _____

E-Mail Address: _____

B. Name of Chief Financial Officer/Authorized Contact Person
(Indicate address if Different from Above)

Telephone # _____

Fax #: _____

Employer Identification or Social Security Number

Spouse's Social Security Number

BID/CONTRACT AMOUNT: _____

Nature of Contract: _____

Labor: $_____ Material: $_____

Contract Number: _____

C. **ALL QUESTIONS MUST BE ANSWERED TO EXPEDITE APPROVAL PROCESSS. ANY QUESTION NOT ANSWERED MAY RESULT IN A DENIAL OF INCOME TAX CLEARANCE.**

Check One: ☐ **Individual** ☐ **Corporation** ☐ **Partnership** ☐ **Estate & Trust**

INDIVIDUALS ANSWER QUESTIONS 1, 2, 3, 4.

1. Has contractor filed joint returns with spouse during last seven (7) years? (If yes, include Spouse's SSN above) Yes ☐ No ☐
2. Is contractor a student, and/or claimed as a dependent on someone else's tax return? Yes ☐ No ☐
3. Was contractor employed during last seven (7) years? Yes ☐ No ☐
4. Was contractor a resident of Detroit during last seven (7) years? Yes ☐ No ☐

CORPORATIONS AND PARTNERSHIPS ANSWER QUESTIONS 5, 6, 7.

5. Is the company a new business in Detroit? If yes, attach Employer Registration, Form DSS-4 Yes ☐ No ☐
6. Will the company have employees working in Detroit? Yes ☐ No ☐
7. Will the company use sub-contractors or independent contractors in Detroit? Yes ☐ No ☐

D.

FOR INCOME TAX USE ONLY

Has the contractor complied with the provisions of City Income Tax Ordinance?

Yes ☐ No ☐ Signature _____ Date _____ Expires _____

Yes ☐ No ☐ Signature _____ Date _____ Expires _____

Yes ☐ No ☐ Signature _____ Date _____ Expires _____

Yes ☐ No ☐ Signature _____ Date _____ Expires _____

VISIT OUR WEBSITE FOR INFORMATION AND TAX FORMS AT: www.detroitmi.gov

NOTE: An approved Income Tax Certificate may be used in multiple city wide departments that require a bid. Please e-mail your completed request form (preferably in pdf format) to: **IncomeTaxClearance@detroitmi.gov**

CITY OF DETROIT

ACCOUNTS RECEIVABLE CLEARANCE APPLICATION
2 WOODWARD AVENUE, SUITE 105, COLEMAN A YOUNG MUNICIPAL CENTER
REVENUE COLLECTIONS UNIT (313) 224-4087 / FAX: 224-4238 / RevenueCollections@DetroitMi.gov

☐ **SECTION A:** ☐ BUSINESS LICENSE ☐ BUDGET ☐ CITY COUNCIL ☐ DDOT ☐ DPW ☐ FINANCE ☐ FIRE ☐ HEALTH ☐ HUMAN RIGHTS ☐ LAW ☐ MAYOR ☐ OMBUDSMAN ☐ PLANNING& DEVELOPMENT ☐ POLICE ☐ PURCHASING ☐ RECREATION ☐ WATER & SEWAGE OTHER_____

ADDRESS OF DEPARTMENT_____

DATE SENT_____ CONTACT PERSON_____

PHONE NUMBER_____ FAX NUMBER_____ EMAIL_____

CONTRACT AMOUNT $_____

☐ **SECTION B: CORPORATION** LICENSE TYPE_____

CORPORATION NAME_____

ADDRESS_____ CITY/STATE/ZIP_____ ☐ OWN ☐ LEASE

CITY PERSONAL PROPERTY NUMBER_____ **FID / EIN NUMBER**_____

OTHER CITY-OWNED PROPERTY PARCELS_____

CONTACT PERSON_____ PHONE NUMBER_____ **EMAIL ADDRESS**_____

☐ **SECTION C: PARTNERSHIP** LICENSE TYPE_____

BUSINESS NAME_____

BUSINESS ADDRESS_____ CITY/STATE/ZIP_____ ☐ OWN ☐ LEASE

CITY PERSONAL PROPERTY NUMBER_____ **FID / EIN NUMBER**_____

A: PARTNER'S NAME_____ PHONE NUMBER_____

HOME ADDRESS_____ CITY/STATE/ZIP_____ ☐ OWN ☐ LEASE

DRIVER'S LICENSE #_____ OTHER CITY-OWNED PROPERTY PARCELS_____

_____

B. PARTNER'S NAME_____ PHONE NUMBER_____

HOME ADDRESS_____ CITY/STATE/ZIP_____ ☐ OWN ☐ LEASE

DRIVER'S LICENSE #_____ OTHER CITY-OWNED PROPERTY PARCELS_____

_____

CONTACT PERSON_____ PHONE NUMBER_____ **EMAIL ADDRESS**_____

☐ **SECTION D: SOLE PROPRIETORSHIP** LICENSE TYPE_____

BUSINESS NAME_____

BUSINESS ADDRESS_____ CITY/STATE/ZIP_____ ☐ OWN ☐ LEASE

CITY PERSONAL PROPERTY NUMBER_____ **FID / EIN NUMBER**_____

OWNER'S NAME_____ DRIVER'S LICENSE #_____ PHONE NUMBER_____

HOME ADDRESS_____ CITY/STATE/ZIP_____ ☐ OWN ☐ LEASE

OTHER CITY-OWNED PROPERTY PARCELS_____

EMAIL ADDRESS_____

☐ **SECTION E: PERSONAL SERVICES**

NAME_____ ADDDRESS_____ ☐ OWN ☐ LEASE

CITY/STATE/ZIP_____

PHONE NUMBER_____ DRIVER LICENSE #_____

OTHER PROPERTY ADDRESSES OWNED IN WITHIN DETROIT_____

SOCIAL SECURITY NUMBER_____ **EMAIL ADDRESS**_____

FOR TREASURY COLLECTION USE ONLY:

☐ APPROVED ☐ DENIED ☐ DENIED WITH ATTACHMENTS

_____ _____ CLEARANCE VALID UNTIL_____

SIGNATURE DATE

GENERAL CONDITIONS

(Revised as of June 1, 1964)

1. DEFINITIONS

The following words and expressions, or pronouns used in their stead, shall wherever they appear in this Contract, be construed as follows, unless a different meaning is clear from the context:

"***Bulletin***" shall mean any additional contract provisions, or change, revisions, or clarification of the Contract Documents issued in writing by the City Engineer, on behalf of the City, to prospective bidders prior to the receipt of bids.

"***City***" shall mean the City of Detroit, a municipal corporation, party of the first part, acting through that Official, Board, or Commission named in the Agreement as acting on behalf of the City.

"***City Engineer***" shall mean the City Engineer of the City of Detroit acting personally or, in his absence, through the then acting City Engineer.

"***Engineer***" shall mean the City Engineer of the City of Detroit acting directly, or indirectly through his authorized representatives acting within the limits of the respective authority delegated to them.

"***City Engineer***" shall mean the officer currently holding the office named in the Agreement as acting on behalf of the City in this Contract in accordance with the provisions of the Charter of the City of Detroit.

"***Common Council***" shall mean the City Council of the City of Detroit.

"***Contract***" or "***Contract Documents***" shall mean each of the various parts of the Contract referred to in Article 1 of the Agreement hereof, both as a whole and severally.

"***Contractor***" shall mean the party of the second part hereto, whether corporation, firm, or individual, or any combination thereof, and its, their, or his successors, personal representatives, executors, administrators and assigns, and any person, firm, or corporation who or which shall at any time be substituted in place of the party of the second part under this Contract, and shall include in their respective capacities, the President, Manager, or other officer or agent for the time being, representing or locally managing the work of any corporation contracting herein.

"***Other Contractors***" shall mean any contractor, other than the party of the second part or his subcontractors, who has a direct contract with the City of Detroit for work on or adjacent to the site of the work.

"***Contract Work***" shall mean everything expressly or impliedly required to be furnished and done by the Contractor by any one or more parts of the Contract Documents, except "extra work" as hereinafter defined; it being understood that, in case of any inconsistency between any part of parts of this Contract, the City Engineer shall determine which shall prevail.

"***Extra Work***" shall mean work other than that which is expressly or impliedly required by the Contract Documents at the time of execution of the Contract.

"***Drawings***" or "***Contract Drawings***" shall mean only those drawings specifically entitled as such and as listed in the Contract, or in any Bulletin, or any detailed drawing furnished by the City Engineer, pertaining or supplemental thereto.

"***Implied Work***" shall mean any work, except "Extra Work" that may have been omitted in the description of said work, but the use of which is implied or necessary, and shall be deemed to be included in this Contract and shall be furnished by the Contractor as if the same had been stated specifically, without any additional charge to the City.

"***Inspector***" shall mean any representative of the Engineer designated to inspect the work.

"***Materialman***" shall mean any person, firm, or corporation, other than employees of the Contractor, who or which contracts with the Contractor, or any of his subcontractors, to fabricate or deliver, or who actually fabricates or delivers, plant, materials, or equipment to be incorporated in the work.

"***Notice***" shall mean written notice.

"***Specifications***" or "***Contract Specifications***" shall mean all of the directions, requirements, and standards of performance applying to the work as hereinafter detailed and designated under the General Specifications and the several divisions of the Detailed Specifications.

"***Site***" shall mean the area upon or in which the Contractor's operations are carried on, and such other areas adjacent thereto as may be designated as such by the Engineer.

"***Subcontractor***" shall mean any person, firm, or corporation, other than employees of the Contractor, who or which contracts with the Contractor to furnish, or actually furnishes, labor, or labor and materials, or labor and equipment, at or about the site, but shall not include one who merely furnishes materials or equipment.

"***The Work***" shall mean all structures, equipment, plant, labor, materials, and facilities or things now or hereafter required to be furnished, installed, or done by the Contractor under or pursuant to this Contract, including extra work; and "performance of work" and words of similar import shall mean the furnishing, installation, or doing thereof.

"***Directed***", "***Required***", "***Approved***", and words of like import whenever they apply to the work or its performance; the words "directed," "required," "permitted," "ordered," "designated," "establish," "prescribed," and words of like import used in the Contract, Specifications, or upon the Drawings, shall imply the direction, requirement, permission, order, designation, or prescription of the Engineer; and "approved," "acceptable," and words of like import shall mean approved by or acceptable to the Engineer.

"***Approved Equal***" shall mean materials, articles, or methods which have been approved by the Engineer as being equal to those specified or shown on the Drawings.

2. CORRELATION & INTENT OF DOCUMENTS

The Contract Documents are complementary and what is called for by any one shall be binding as if called for by all. The intent of the documents, unless otherwise specifically provided, is to produce complete and finished work. No verbal conversation, understanding, or agreement with any officer or employee of the City, either before or after the execution of the Contract, shall affect or modify any of the terms, conditions, or obligations contained in the Contract Documents.

A. Contract Drawings & Specifications: The Engineer will furnish the Contractor, without charge, such copies of the Contract and any Supplemental Drawings and Specifications reasonably necessary for the proper execution of the work. The Contractor shall keep on the site of the work at least one copy of all Drawings and Specifications which shall be accessible at all times to the Engineer.

Anything mentioned in the Specifications and not shown on the Drawings, or shown on the Drawings and not mentioned in the Specifications, shall be of like effect as if shown on or mentioned in both. In case of any apparent difference between the Drawings and Specifications, the Contractor shall refer the matter to the Engineer for a decision as to which, in accordance with the intent of the Contract Documents, shall govern. Procedure without such decision shall be at the Contractor's own risk and expense.

B. Supplemental Drawings & Specifications: In order to carry out the intent of the Contract Documents and to assist the Contractor in performing his work, the City Engineer, after the execution of the Contract, may, by Supplemental Drawings, Specifications, or otherwise, furnish additional instructions, enlarged-scale, additional, or revised details, as may be necessary for construction purposes.

All such Supplemental Drawings, Specifications, or instructions are intended to be consistent with the Contract Documents, true developments thereof, and reasonably inferable therefrom. Therefore, no extra costs will be allowed by the City on a claim that particular Supplemental Drawings, Specifications, or instructions differ from the requirements of the Contract Documents, incurring extra costs, unless the Contractor has first brought the matter, in writing, to the City Engineer's attention for proper adjustment before proceeding with the work covered by such.

If the City Engineer shall decide that there is no departure from the requirements of the Contract Documents, the Contractor shall then proceed with the work as shown, specified, or directed. If the City Engineer shall decide that extra work is involved, he will so modify the Supplemental Drawings, Specifications, or instructions to eliminate the extra work, or cause a City's written order to be issued in accordance with Article 19 herein.

C. Errors and Corrections in Drawings & Specifications: The Contractor shall not be allowed to take advantage of any manifest errors, omissions, or discrepancies in the Drawings or Specifications, as full instructions will be issued by the City Engineer for correction in accordance with the original intent of the Contract Documents. In case of any errors, omissions, or discrepancies in the Drawings or Specifications, the Contractor shall promptly submit the matter to the City Engineer who, in turn, shall promptly make a determination and issue the necessary instructions in writing. Any adjustment by the Contractor without this determination and instructions shall be at the Contractor's own risk and expense.

The work is to be made complete as intended by the Contract Documents, notwithstanding minor omissions in the Drawings & Specifications.

3. CONTRACTOR'S WARRANTIES & UNDERSTANDING

In consideration of, and to induce the award of the Contract to him, the Contractor represents and warrants:

A. That he is financially solvent, and sufficiently experienced and competent to perform the work; and
B. That the facts stated in the Proposal and the information given by him pursuant to the Bidding Documents are true and correct in all respects; and
C. That he has read, understands, and complied with all the requirements set forth in the Bidding Documents; and
D. That he has, by careful examination, satisfied himself as to the nature, amount, and location of the work, the character of construction equipment and facilities needed to perform the work, the general and local conditions, and all other matters which may in any way affect the work under this Contract.

Unless otherwise specifically provided for in the Contract Documents, the Contractor shall do all the work and shall furnish all the tools and appliances except as herein otherwise specified, necessary or proper for performing and completing the work required by this Contract, in the manner and within the time herein prescribed.

4. CONTRACTOR'S RESPONSIBILITIES

In addition to those matters elsewhere expressly made the responsibility of the Contractor, the Contractor shall have the full and direct responsibility for the performance of the work under this Contract. He shall take all precautions for safely conducting the work and preventing injuries or damage to persons or property on or about the work. He shall bear all losses, if any, resulting to him on account of the amount and character of the work, or because the conditions under which the work must be done are different from what were estimated or anticipated by him, or because of weather, floods, elements, or other causes. He shall assume the defense and save harmless the City of Detroit and its individual officers, employees, or agents from any and all claims arising out of the work performed or to be performed, and for any act or neglect of the Contractor, his agents or employees.

The mention of any specific responsibility or liability of the Contractor in this or in any part of the Contract Documents shall not be construed as a limitation or restriction upon the general responsibility or liability imposed on the Contractor by the Contract Documents.

5. COMPLIANCE WITH LAWS

The Contractor shall fully comply with all local, state and federal laws, ordinances, and regulations applicable to this Contract and the work to be done hereunder.

The Contractor shall secure all permits and licenses necessary for the prosecution of the work and shall fully comply with all their terms and conditions. All required permits and licenses shall be secured by the Contractor without additional cost to the City.

It is the intent that all work required to be done under this Contract comply with the applicable permits and licenses as issued to the Contractor. Should any applicable permit or license be issued with special supplemental requirements pertaining specifically to this Contract which are in variance with express Contract requirements, the Contractor shall immediately report the matter in writing, to the City Engineer for determination and adjustment as may be found necessary. The City Engineer will cause a written order to be issued in accordance with the Articles 19 and 20 herein covering such changes in the work as may be necessary to comply with such special supplemental conditions or requirements, unless the City Engineer secures a written waiver covering the difference from the issuing department or agency.

Should Contractor fail to observe the foregoing provisions and construct work in variance with any special supplemental requirements of the applicable permit or license pertaining specifically to the work under this Contract, or with such as amended by waiver, notwithstanding the fact that such construction is in compliance with the Drawings and Specifications, the Contractor shall remove such work without cost to the City, but the City's written order will be issued only to cover the excess cost, if any, that the Contractor would have been entitled to receive if the change had been made before the Contractor commenced work on the items involved.

Should the issuing department or agency after issuing the permit or license later require changes in the work constructed in accordance with the Drawings & Specifications, or the special supplemental requirements of such permits or licenses, the City Engineer will cause a written order to be issued in accordance with Articles 19 and 20 herein covering such changes in the work as may be necessary to conform to the later requirements.

6. PROTECTION OF WORK & OF PERSONS AND PROPERTY

During the performance and up to date of final acceptance, the Contractor shall be under absolute obligation to protect the finished and unfinished work against any damage, loss, or injury. In event of such damage, loss, or injury, the Contractor shall promptly replace or repair such work, whichever the Engineer shall determine to be preferable. The obligation to deliver finished work in strict accordance with the Contract prior to final acceptance shall be absolute and shall not be affected by the Engineer's approval of or failure to prohibit means and methods of construction used by the Contractor.

During performance and up to the date of final acceptance, the Contractor shall take all reasonable precautions to protect the persons and property of City and others on or adjacent to the site of the work from damage, loss, or injury from his or his subcontractors' operations under this Contract, except such property as the owners thereof may themselves be under a legal duty to protect. The Contractor's obligation to protect shall include the duty to provide, place, and adequately maintain at or about the site, suitable guards, lights, barricades, enclosures, danger signals, provide watchmen and such other facilities for protection required by public authority, local conditions, or by order of the Engineer. In an emergency affecting the safety of life or of the work or of adjoining property, the Contractor, without special instruction or authorization of the Engineer, shall take such action necessary to prevent threatened damage, loss, or injury.

Within three days after notice to him of the happening of any such damage, loss, or injury to persons, work, or property, the Contractor shall make a full and complete report thereof in writing to the City Engineer.

If the persons or property of others on or adjacent to the site sustain damage, loss, or injury resulting directly or indirectly from the work of the Contractor, or his subcontractors, in the performance of this Contract, or from his or their failure to comply with any of the provisions of this Contract or law, the Contractor shall defend, indemnify, and hold the City harmless from any and all claims and judgments to which the City may be subjected or which it may suffer or incur by reason thereof.

The provisions of this Article shall not be deemed to create any new right of action in favor of third parties against the Contractor, or the City.

7. PROTECTION FOR LABOR & MATERIAL

The Contractor for himself or any of his subcontractors shall pay all indebtedness which may become due to any person, firm, or corporation having furnished labor, materials, or both in the performance of this Contract. The "Payment Bond" furnished by this Contract is pursuant to Act 351 of the Public Acts of Michigan for the year 1972, as it may be amended to date. It shall be the responsibility of each person, firm, or corporation claiming to have furnished labor, materials, or both, in connection with this Contract, to protect his or its interests in the manner prescribed by the Act 351.

8. INSURANCE

During performance and up to the date of final acceptance of the work, the Contractor shall effect and maintain the following types of insurance, when so required by the Standard Notice to Bidders and in amounts not less than those stated therein. Such insurance shall be carried by financially responsible insurance companies, licensed in the State of Michigan, and satisfactory to the City. Before commencing work, the Contractor shall submit the original or certified copies of his policies to the Engineer for review and approval. Any policy found not satisfactory shall be corrected or replaced by a new policy and, if necessary, from another company. Insurance policies covering operations under this Contract which expire before final acceptance of the work shall be renewed and the new policies submitted to the Engineer for review and approval. All policies which are subject to cancellation shall be endorsed to provide that such cancellation shall not become effective without twenty days' prior notification to the City Engineer for Workmen's Compensation and ten day's prior notification for all other types of insurance. Certificates of insurance shall also be filed with the City Engineer.

A. Workmen's Compensation Insurance: All employees of the Contractor and his subcontractors engaged in work at the site shall be covered by Workmen's Compensation Insurance, in accordance with the Michigan State Compensation Law. In case any work is sublet, the Contractor shall require each subcontractor to similarly provide Workmen's Compensation Insurance for his respective employees, unless such employees are covered by the insurance provided by the Contractor.

B. Public Liability and Property Damage Insurance: Public Liability Insurance and Property Damage Insurance shall protect the Contractor against his liability because of injury, sickness, or disease, including death at any time resulting therefrom sustained by any person, not employees, and against his liability because of injury to or destruction of property of others, including the loss or use thereof, respectively, caused by any and all operations under this Contract, including, but not limited to, the use of any and all types of construction equipment and methods used on the work.

In case any work is sublet, the Contractor shall effect and maintain Protective or Contingent Public Liability and Property Damage Insurance, in amounts not less than those fixed for Public Liability and Property Damage Insurance, to protect him against his liability arising out of the operations at the site of such subcontractors.

In addition to the above requirements, if any work is sublet, the Contractor shall require each subcontractor not fully protected under the Contractor's Public Liability and Property Damage Insurance Policies, to effect and maintain during the period of his respective operations at the site, Public Liability and Property Damage Insurance. The amounts of such insurance, if not in the same amounts as fixed for the Contractor, shall be determined by the Engineer based on the nature and potential hazards of the operations of the respective subcontractors, and shall not necessarily be based on the amount of the subcontract. In no case, however, shall the amount of such coverage for Public Liability be less than $100,000 for one person and $300,000 for each accident or occurrence, nor the amount for Property Damage be less than $100,000 for each accident and $300,000 for aggregate operations, and may be fixed up to and including the amounts fixed in the Special Notice to Bidders.

C. Fire Insurance: Fire Insurance with Extended Coverage and Vandalism & Malicious Mischief endorsements shall be at 100 per cent value, and shall include items of labor and materials connected therewith whether in or adjacent to the structure insured; materials in place, or to be used as part of the permanent construction, including surplus materials, shanties, protective fences, bridges, or temporary structures; miscellaneous materials and supplies incident to the work; and such scaffolding, stages, towers, forms, and equipment as are not owned or rented by the Contractor, the cost of which is included in the cost of the work. This insurance shall not cover any tools owned by mechanics, any tools, equipment, scaffolding, stages, towers, and forms owned by the Contractor, the capital value of which is not included in the cost of the work.

The policy shall be secured in the name of the City of Detroit for the benefit of the Contractor and/or the City, as the City Engineer shall find their respective interests to appear. The original of the policy shall be filed with the City Engineer for transmittal to the City Controller, who shall retain it until the work has been physically completed and found, by the City Engineer, to be acceptable under the terms of the Contract. The policy shall not be canceled or permitted to expire without the consent of the City Engineer in writing.

The loss, if any, when paid, except such portion or portions thereof which may be applied for loss or damage to the Contractor's temporary plant and equipment, shall be retained by the City as security for the performance by the Contractor of his obligations under the Contract, and shall be released to the Contractor in periodical payments as such performance progresses.

D. Other Insurance: Other types of insurance, if any, shall be in the amounts as fixed in the Special Notice to Bidders. All applicable provisions of this Article shall also apply to such additional insurance.

9. MATERIALS & WORKMANSHIP

Unless otherwise expressly provided in the Contract Drawings or Specifications, the work shall be performed in accordance with the best modern practice with materials and workmanship of the highest quality for the particular purpose. The Engineer shall judge and determine the Contractor's compliance with these requirements.

Where materials, equipment, or articles are specified by a particular brand, or name of a proprietary product, or "approved equal," the Engineer shall decide the question of quality of other materials, equipment, or articles proposed by the Contractor. Materials, equipment, or articles specified by reference to the number of a specific standard, such as an A.S.T.M. Standard, a Federal Specification, or similar standard, shall comply with such standard, except as limited to type, class or grade, or modified in such reference. The Standards referred to, except as modified in the Specifications, shall have full force and effect as though printed in full therein.

The Contractor shall be free to secure the approved materials, equipment, and articles from sources of his own selection. However, if the Engineer finds that the work will be delayed or adversely affected in any way because a selected source of supply cannot furnish a uniform product in sufficient quantity and at the time required, or the product is not suitable for the work, the Engineer shall have the right to require the original source of supply changed by the Contractor. The Contractor shall have no claim for extra cost or damage because of this requirement.

10. INFORMATION BY THE CONTRACTOR

The Contractor shall submit to the Engineer for approval, information concerning the materials, equipment, and articles which he proposes to furnish and the manner or arrangements for incorporating them in the work. This information shall be complete to the extent necessary that the Engineer may intelligently determine if the proposed materials, equipment, articles, manners, and arrangements are acceptable and will meet the Contract requirements. The information shall be in the form and submitted in the manner prescribed in the General Specifications or as directed by the Engineer.

The information shall be submitted on dates sufficiently in advance of requirements to afford the Engineer ample time to check it, including time for correcting, resubmitting, and recheck, if necessary, and no request for an extension of the Contract time for completion will be granted to the Contractor by reason of his failure in this respect.

Any work done by or for the Contractor prior to the Engineer's required approval of materials, equipment, articles, and their arrangements, based on the information submitted by the Contractor, shall be at the Contractor's own risk and subject to subsequent rejection.

The approval of the Contractor's information covering materials, equipment, articles, manners, and arrangements by the Engineer shall be general and shall not relieve the Contractor from responsibility for adherence to the Contract, nor shall it relieve him of responsibility for any errors which may exist.

11. MEANS AND METHODS OF CONSTRUCTION

Unless otherwise expressly provided in Contract Drawings, Specifications, or Bulletins, the means and methods of construction shall be such as the Contractor may choose; subject, however, to the Engineer's right to prohibit means and methods proposed by the Contractor which in the Engineer's judgment:

A. Will constitute a hazard to the work, or to persons or property, or violate express requirements of applicable laws or ordinances; or
B. Will cause unnecessary or unreasonable inconvenience to the public; or
C. Will not produce finished work in accordance with the requirements of the Contract Documents; or
D. Will not assure the work to be completed within the time allowed by the Contract.

The Engineer's approval of the Contractor's means or methods of construction, or the Engineer's failure to exercise his right to prohibit such means or methods, shall not relieve the Contractor of his obligation to accomplish the result intended by the Contract; nor shall the exercise of such right to prohibit create a cause of action for damages.

Where the Contract Drawings, Specifications, or Bulletins require the use of specific means or methods of construction, the Contractor shall submit his proposed plan of procedure to the Engineer sufficiently in advance to permit a reasonable time for determining the adequacy and safety of the proposed plan. Failure to so submit the proposed plan within a reasonable time shall not create a cause of action for damages for the resulting delay in the work or be a cause for extension of time by the City for completion of the work.

12. SUPERINTENDENCE BY CONTRACTOR

The work under this Contract shall be under the direct charge and superintendence of the Contractor. Except where the Contractor is an individual and gives his personal superintendence to the work, the Contractor shall provide a competent superintendent or general foreman on the work at all times during progress with full authority to act for him. The Contractor shall also provide an adequate staff for the coordination and expediting of his work.

The superintendent and staff shall be satisfactory to the Engineer. The superintendent or general foreman shall not be changed during this Contract except with the written consent of the City Engineer unless the superintendent or general foreman proves unsatisfactory to the Contractor and ceases to be in his employ.

13. EMPLOYEES

The Contractor shall employ only competent, efficient workmen and shall not use on the work any unfit person or one not skilled in the work assigned to him, and shall at all times maintain good order among his employees.

Whenever the Engineer shall inform the Contractor, in writing, that, in his opinion, any employee is unfit, unskilled, disobedient, or is disrupting the orderly progress of the work, such employee shall be removed from the work and shall not again be employed on it.

Neither party shall employ or hire any employee of the other party without the latter's consent.

14. WORKING AREA

The Contractor shall confine his equipment, storage of materials, and construction operations to the area shown on the Contract Drawings or stated in the Specifications, prescribed by ordinance, laws, or permits, or as may be directed by the Engineer, and shall not unreasonably encumber the site or public rights-of-way with his construction equipment, plant or materials.

Such area shall not be deemed for the exclusive use of the Contractor. Other contractors of the City may enter upon and use such portions of the area and for such times as determined necessary by the Engineer for all purposes required by their contracts. The Contractor shall give to such other contractors all reasonable facilities and assistance to the end that the work on this and the other contracts will not be unduly or unreasonably delayed. Any additional grounds desired by the Contractor for his use shall be provided by him at his own cost and expense.

15. OTHER CONTRACTORS

The City of Detroit may award other contracts for additional work on this project, or contiguous thereto, and the Contractor shall fully cooperate with such other contractors and shall coordinate and fit his work to be done hereunder to such additional work as may be directed by the Engineer. The Contractor shall not commit or permit any act that will interfere with the performance of work by any other contractor.

If the City Engineer shall determine that Contractor is failing to coordinate or fit his work with the work of other contractors or City forces as directed by him or his authorized representative:

A. The City shall have the right to withhold payments due hereunder until such time as the Contractor complies; and
B. The Contractor shall indemnify and hold the City harmless from any and all claims of judgment from damages and from costs and expenses which the City may suffer, incur, or be subjected to by the Contractor's failure to carry out the Engineer's directions; and

C. The City shall have the right to retain such monies as provided for in Article 33 herein as the City may decide necessary to protect itself with respect to claims which may be made for damages caused by the failure to carry out the Engineer's directions.

Upon receiving written notice from the Contractor that another contractor is failing to coordinate his work with the work under this Contract as directed by the Engineer, the City Engineer will promptly investigate the charge and take such necessary action as the situation may require. However, the City shall not be liable to the Contractor for damages suffered by this Contractor through failure of another contractor to carry out the directions of the Engineer, or by reasons of another contractor's default in performance, as the City makes no warranty as to the responsibility or continued ability of another contractor.

If the Contractor suffers damage by reason of any act or omission of such other contractor, the Contractor shall have no claim against the City, but shall have the right to recover such damages from the other contractor under the provision similar to the following provision which has or will be inserted in the contracts with such other contractors who are or who will be performing work upon the site of the work to be performed hereunder.

Should any other contractor having, or who shall hereafter have, a contract with the City of Detroit for the performance of work upon the site of the work to be performed hereunder, suffer any damage through the act or omission of the Contractor hereunder, or through any act or omission of any subcontractor of the Contractor, the Contractor agrees to reimburse such other contractor for all such damages and hold the City harmless from all such claims.

16. CITY'S RIGHTS TO SUSPEND WORK

The City shall have the right by written order to require the Contractor to suspend the whole or part of the work whenever, in the judgment of the City Officer, such suspension is required:

A. In the interest of the City generally;

B. Due to Government controls or orders which make performance of this Contract temporarily impossible or illegal;

C. To coordinate the work of the various contractors engaged on this project;

D. To expedite the completion of the entire project even though the completion of this particular Contract may be thereby delayed.

The written order of the City Officer to the Contractor shall state the reasons for suspending work and the anticipated periods for such suspension. Upon receipt of the City Officer's written order, the Contractor shall suspend the work covered by the order and shall take such means and precautions as may be necessary to properly protect the finished and partially finished work, the unused materials, and uninstalled equipment. Work shall not be again be resumed on that part of the work ordered suspended until ordered by the City Officer in writing so to do.

No additional compensation shall be paid to the Contractor for such suspension other than:

A) Extending the time for the completion of the work, as much as it may have been delayed by such suspension, as determined by the City Engineer;

B) The actual and necessary costs of properly protecting the finished and partially finished work, unused materials, and uninstalled equipment during the period of the ordered suspension as determined by the City Engineer as being beyond the Contract requirements. Such costs, if any, shall be determined on the basis set forth in Article 20 herein.

If the City Engineer does not give the Contractor a written order to resume work within 60 days from the date fixed in the written order to suspend work, then the Contractor shall be entitled to receive any money retained by the City on all work done on the portions ordered delayed. Such money so released will be included in the next succeeding progress payment.

If the City Engineer does not issue the written order to resume work within 90 calendar days from the date fixed in the written order to suspend work, then the Contractor may at any time thereafter notify the City Officer, in writing, with a copy to the City Engineer, of his intention to terminate the Contract within a stipulated time from the date of such notification, which time shall not be less than 30 days, unless the written order to resume work is issued by the City Officer within such stipulated time. If, at the expiration of the time stipulated in the Contractor's written notification, the written order to resume work has not been issued by the City Officer, the Contract will be considered terminated. Final settlement with the Contractor for the work performed will be made in accordance with the provisions of Article 27 herein.

17. USE OF COMPLETED PORTIONS OF WORK

The City may, after written notice by the City Officer to the Contractor, take over and use any completed portion of work prior to the final completion of the entire work included in the Contract, and notwithstanding that the time allowed for final completion has not expired. The Contractor shall not object to, nor interfere in any way with, such occupancy or use after receipt of the City Officer's written notice.

Immediately prior to such occupancy and use, the Engineer will inspect such portion of the work to be taken over and will furnish the Contractor a written statement of the work, if any, still to be done on such part. The Contractor shall promptly thereafter complete such unfinished work to permit occupancy and use on the date specified in the City Officer's written order, unless the Engineer shall permit specific items of work to be finished after the occupancy and use by the City.

The Contractor shall not be responsible for any damage or maintenance costs due directly to the occupancy and use of such part by the City. The period of guarantee, if any, for such portion of the work shall begin on the date of occupancy and use by the City. If the occupancy and use of such portion directly causes a delay in completion of the balance of the work beyond the time allowed for final completion of the entire work, then the Contractor will be allowed an extension of time commensurate with such delay as determined by the City Officer in accordance with the provisions of Article 18 herein.

When the Contract requires that the Contractor provides fire insurance in accordance with Article 8 herein, such insurance shall not be cancelled or reduced in amount by reason of the occupancy and use by the City of any completed portion of the work. The insurance in the full amount as required by the Contract shall be kept in force and at the Contractor's expense until final acceptance of the entire Contract.

18. DELAYS AND EXTENSION OF TIME

An extension of time for completion of the work under the Contract may be granted by the City Officer, subject to conditions of this Article, but only upon the written application of the Contractor.

In general, an extension of time will be granted by the City Officer only if the delay is unavoidable and substantial, not the fault of the Contractor, and could not be reasonably anticipated or adequately guarded against. The Contractor will not be liable for liquidated damages during the period for which time of completion is extended by the City.

A. Grounds for Extension: The Contractor shall be entitled to a reasonable extension of time for unavoidable delay in completion caused solely by:

1) Any acts or omissions of the City, its officers, or employees;

2) Any acts of other public authority;

3) Causes not reasonably foreseeable by the parties at the time of execution of this Contract and which are entirely beyond the control and without the fault or negligence of the Contractor, including, but not limited to, acts of God, or the public enemy, war or other national emergency making performance temporarily impossible or illegal, acts or omission of other contractors, strikes and labor disputes not brought on by any act or omission of the Contractor, fires, floods, epidemics, quarantine restrictions, freight embargoes, weather of unusual severity such as cyclones or tornadoes, or excessive abnormal weather.

B. Concurrent Causes of Delay: The Contractor shall not be entitled to receive a separate extension of time for each of several causes of delay operating concurrently, but, if at all, only for the actual period of delay in completion of the work as determined by the City Officer, irrespective of the number of the causes contributing to produce the delay. If one of the several causes of delay operating concurrently results from any act, fault, or omission of the Contractor or his sub-contractors or materialmen, and would of itself, irrespective of the current causes, have delayed the work, no extension of time will be allowed for the period resulting from such act, fault, or omission.

C. Delays of Subcontractors or Materialmen: Delays caused by the Contractor's subcontractors or materialmen will, in themselves, not be causes for an extension of time by the City Officer. Such delays to warrant an extension of time must be occasioned by the same causes specified in "A" above, "Grounds for Extension".

D. Delays by Other Contractors: If several contracts are entered into by the City for performance of work on the site of this contract and the specified time of completion of the work under the several contracts is predicated on the work being carried on concurrently, the Contractor will not be entitled to any extensions of time because of necessary interruptions to or suspensions of his work, required to enable the other contractors to perform their work on the site, as such necessary interruptions to or suspension of his work where taken into consideration in fixing the Contract time for completion.

E. Contractor's Application: The Contractor shall submit his written application to the City Engineer within five days from the beginning of the claimed delay, unless the City Engineer should grant additional time if, in his judgment, circumstances so justify, but in any event prior to the Contract date for final completion. Should the delay claimed be for acts or omissions of the City which the City might have rectified or mitigated had the Contractor more promptly submitted his application, the Contractor shall not be entitled to an extension of time for such period of delay as determined by the City Officer resulted from failure of the Contractor to more promptly submit his application. The Contractor's application shall set forth in detail the nature of each alleged cause of delay, the date upon which each such cause of delay began and, if not still continuing, when ended, with the number of days delay attributable to each of such causes. The application shall also give the reason why, in the Contractor's opinion, the delay was unavoidable and beyond his control.

If the Contractor claims that a proposed change in or modification of the Contract will require an extension of time of final completion of the work under the Contract, the Contractor shall submit, as part of his proposal for the proposed change or modification, the extent of additional time required and reasons therefor. Such application will be considered in the same manner as other applications for an extension of time and the determination made by the City Officer will be incorporated in the City Officer's written order, if issued, for the change or modification.

F. City Engineer's Recommendation: The City Engineer will review the Contractor's application and shall ascertain the facts, and the cause and extent of delay and make a recommendation to the City Officer. The City Engineer shall have the authority to request the Contractor to furnish additional information to substantiate any statements or claims made in the application. Failure of the Contractor to promptly and fully furnish the additional information requested shall be deemed a waiver on the part of the Contractor for an extension of time requested. The City Engineer shall be under no obligation, however, to request additional information and may confine his review and base his decision solely on the statements made in the Contractor's original written application.

G. City Officer's Determination: The City Engineer will make a determination based, based on the ascertained facts and the terms of this Contract, if an extension of time is justified, and, if so, will extend the time for completing the work for a period commensurate with the period of excusable delay. The determination made by the City Officer shall be binding and conclusive on the Contractor.

If the City Officer determines that the causes of delay justify an extension of time but the period of such extension can not be simultaneously determined due to the delay still continuing, the City Officer, will extend the time of completion for the delay attributable to such causes, with the proviso that the commensurate period of the extension of time will be later determined when the period of excusable delay can be definitely established. Such extension of time, without the actual period being initially determined, shall in no wise tend to modify or abrogate the Contract provision that time is of the essence, nor permit claim for additional time because of avoidable consequential delays.

H. Permitting Continuation of Work:
Permitting the Contractor to continue with the work after the time fixed in the Contract has expired, or after the time to which such completion may have been extended has expired, or the making of any payments to the Contractor after such time, shall in no wise operate as a waiver on the part of the City of any of its rights under this Contract and shall not in any way release the sureties hereunder.

I. No Damages for Delay: The Contractor agrees to make no claim for damages for delay in the performance of this Contract occasioned by any act or omission of the City and agrees that any such claim shall be fully compensated for by an extension of time to complete performance of the work, as provided for herein.

19. CHANGE OR MODIFICATION OF CONTRACT

The City Officer may, from time to time, by written order to the Contractor, change or modify this Contract, provided the general character of the work as a whole is not materially affected thereby. Such changes or modifications shall not invalidate the Contract or the surety bonds, nor relieve or release the Contractor or Surety from any of their respective obligations or liabilities under the Contract or bonds. Drawings in themselves shall not be considered as a written order.

The written order shall be valid only when signed by the City Officer and, in addition, if the change or modification results in an increase of $1,000 or more in Contract price, the approval of the Common Council has been obtained. The written order shall designate the amount of the adjustment, if any, in the Contract price and stipulate any extension in time for completion of the Contract.

When, in the judgment of the Engineer, circumstances necessitate, but time does not permit the prior determination of the adjustment in the Contract price or in the time of completion, if any, the Engineer shall have authority to issue, on behalf of the City Officer, the required written order, designated as an "emergency order." Such emergency order shall be later confirmed in writing by the City Officer when the adjustment in the Contract price or time of completion, if any, has been determined.

The Engineer shall also have authority to issue a written order on behalf of the City Officer for changes or modifications not involving adjustments in the Contract price or in the time of completion.

20. METHODS FOR DETERMINING ADJUSTMENTS IN CONTRACT PRICE

Adjustments, if any, in the Contract price, either additive or subtractive, by reason of a change or modification in the Contract ordered in writing by the City Officer, shall be limited to the amount stated in the written order. Adjustment in price shall be determined by one or more of the following methods, the City Engineer having the right to select the method or methods used:

A. Lump Sum Amount: By this method, the amount of the adjustment will be the amount of an acceptable lump sum proposal from the Contractor. To facilitate checking and acceptance, the City Engineer shall have the right to require the Contractor's lump sum proposal to be itemized with quantities and prices for the various items.

B. Unit Price: By this method, the amount of the adjustment will be computed by applying acceptable unit prices to the various items. The unit prices may be those for which there are applicable unit prices in the original Proposal, the approved Detailed Estimate, or may be those fixed by subsequent agreement between the City and Contractor.

C. Cost-Plus-Limited Amount: By this method, the amount of adjustment will be determined by (a) the actual, necessary, and reasonable costs directly incurred by the Contractor or subcontractor, plus (b) a fixed percent, and (c) with the total amount limited to the maximum amount stated in the City Officer's written order.

The total amount of the adjustment will be determined as follows:

"Actual Cost" will consist of:

1) Labor: Being the amount shown on the Contractor's payroll for direct labor used, with payroll taxes or contributions for Unemployment Insurance Compensation and Federal Social Security, etc., added, when same have been incurred. In no case, however, shall the wage rates charged for labor exceed the wage rates paid for the same class of labor employed on the original Contract work; plus

2) **Materials:** Being the net cost of materials, including the cost of transportation to the site, as shown by invoices; plus

3) **Equipment:** Being the actual cost of equipment rental, or rental value if contractor-owned, but not to exceed the prevailing rentals charged in the Detroit district for equipment of like size and condition, plus the actual incurred costs for necessary supplies and repairs for operating the equipment; plus

4) **Insurance:** Being the net additional cost of insurance premiums which are incurred and which are determined from the labor payrolls, limited, however to such types of insurance required by the Contract.

To the total sum of Items 1 through 4 shall be added the following percent:

5) **For Work Done by Contractor's Forces:** Fifteen percent as compensation for all other items of expense, including superintendence, use of ordinary tools, general overhead, bonds, and profit.

6) **For Work Done by Subcontractor's Forces:** Ten percent of the subcontractor's "actual costs," computed in accordance with Items 1 through 4, as full compensation for all other items of expense and profit of the subcontractor, plus an additional five percent of the subcontractor's "actual costs" as full compensation for all the other items of expense and profit of the Contractor.

7) **When Both Extra and Omitted Work: When** the City Engineer's written order involves both extra work and omitted Contract work in a lump sum contract, or a part of a lump sum item in a unit price contract, the difference between the actual cost of the extra work, obtained pursuant to Items 1 through 4, and the estimated net cost, exclusive of overhead and profit, of the omitted Contract work shall be determined. The estimated net cost of the omitted Contract work shall be taken at 87 percent of the total cost shown in the Detailed Estimate or lump sum amount for the item in the Proposal, or, if such is not applicable, by estimate according to Items 1 through 4.

The total adjustment in the Contract price shall then be determined as follows:

A) **Net Increase:** If the actual cost of the extra work exceeds the estimated net cost of the omitted Contract work, the Contract price shall be increased by the net difference, plus the applicable percent in Items 5 or 6.

B) **Net Decrease:** If the estimated net cost of the omitted work exceeds the actual cost of the extra work, the Contract price shall be reduced by the net difference, plus five percent of the estimated net cost of the omitted work. When the City's written order involves both extra work and omitted work covered by Contract unit prices, the cost of the extra work shall be determined in accordance with Items 1 through 6 and the cost of the omitted work shall be obtained by Contract unit prices. The adjustment in the Contract price shall be the difference, either additive or subtractive, between the cost of the extra work and the omitted work.

8) **Maximum Limit of Cost:** The total amount of the adjustment in the Contract price shall be limited to the maximum amount stated in the City Officer's written order to the Contractor to perform the work. The final amounts that are to be allowed will be as computed pursuant to Items 1 through 7 or the stated maximum amount, whichever is the lesser amount.

9) **Records of Costs:** The Contractor and his subcontractors shall keep accurate, complete, daily records of the net actual cost incurred for the extra work performed, and shall present such information in the form and times as directed by the Engineer, as provided for in Article 22 herein.

21. DISPUTED WORK, DETERMINATION, OR ORDER

If the Contractor is of the opinion that (a) the work necessary or required to accomplish the result intended by this Contract, or (b) any work ordered to be done as Contract work by the Engineer, is extra work and no contract work, or (c) any determination or order of the Engineer or City Officer violates the terms and provisions of this Contract, the Contractor shall promptly, either before proceeding with such work or complying with such order or determination, or simultaneously therewith, notify the City Engineer in writing of his contentions with respect thereto and request a final determination thereof.

Such determination of the City Engineer shall be given in writing to the Contractor. If the City Engineer determines that the work in question is extra work and not Contract work, or the determination or order complained of requires performance by the Contractor beyond that required by the Contract or violates the terms and provisions of the Contract, thereupon the City Engineer shall cause either (a) the issuance of a written order by the City covering the extra work as provided for in Article 19 hereof, or (b) the determination or order complained of to be rescinded or so modified so as to not require performance beyond that required by or so as not to be in violation of the terms and provisions of the Contract.

If the City Engineer determines that the work in question is Contract work and not extra work, or that the determination or order complained of does not require performance by the Contractor beyond that required by the Contract or violates the terms and provisions of the Contract, he will direct the Contractor to proceed and the Contractor must promptly comply. However, in order to reserve his right to claim compensation for such work or damages resulting from such compliance, the Contractor must, within five days after receiving the City Engineer's determination and direction, notify the City Engineer in writing that the work is being performed, or that the determination and direction is being complied with, under protest.

If the Contractor fails to so appeal to the City Engineer for a determination or, having so appealed, should the Contractor thus fail to notify the City Engineer in writing of his protest, the Contractor shall be deemed so have waived any claim for extra compensation or damages therefor. No oral appeals or oral protests, no matter to whom made, shall be deemed even substantial compliance with the provisions of this Article.

If the Contractor shall claim to be sustaining damages by reason of any acts or omissions of the City, its officers, or employees, he shall within five days after such acts or omissions occur, notify the City Officer in writing, with a copy to the City Engineer, except that if the claim is of a continuing character and the notice of claim is not given within the five days of its commencement, the claim will be considered only for a period commencing five days prior to the receipt by the City Officer of the notice thereof. Within 30 days after the date of notification, or within such additional time as may be granted in writing by the City Engineer upon the Contractor's written request therefor, the Contractor shall submit to the City Engineer verified detailed statements of the damages sustained together with documentary evidence of such damages. On failure of the Contractor to fully comply with the foregoing provisions, such claims shall be deemed waived and no right to recover on such claims shall exist.

In addition to the foregoing statements, the Contractor shall, upon notice from the City Officer, produce for examination at the Contractor's office, by the representatives of the City, all his books of record, showing all of his acts and transactions in connection with or relating to or arising by reason of this Contract. At such examination a duly authorized representative of the Contractor may be present.

Unless the aforesaid statements shall be made and filed within the time aforesaid and the aforesaid records submitted for examination, the City shall be released from all claims arising under, relating to, or by reason of this Contract, except for the sums certified by the City Officer to be due under the provisions of this Contract. It is further stipulated and agreed that no person has power to waive any of the foregoing provisions, and that in any action against the City to recover any sum in excess of the sums certified by the City Officer to be due under or by reason of this Contract, the Contractor must allege in his complaint and prove, at the trial, compliance with the provisions of this section.

In connection with the examination provided for herein, the City Engineer, upon demand therefor, will also produce for inspection by the Contractor such records as the City may have with respect to such disputed work or work performed under protest pursuant to order of the City Officer, except those records and reports which may have been prepared for the purpose of determining the accuracy and validity of the Contractor's claim.

22. PERFORMANCE OF EXTRA OR DISPUTED WORK

While the Contractor or his subcontractor is performing extra work in accordance with the City Officer's written order, the cost of which is to be determined by method "C" of Article 20 hereof, or is performing disputed work or complying with a determination or order under protest in accordance with Article 21 hereof, in each case the Contractor shall daily furnish the Engineer's representative at the site with three copies of verified statements showing:

A. The name and number of each workman employed on such work or engaged in complying with such determination or order, the character of work each is doing and the wages paid to him, including the rate and amount of payroll taxes and contributions for Unemployment Insurance and Federal Social Security; and

B. The nature and quantity of any materials, plant, or construction equipment furnished or used in connection with the performance of such work or in complying with such determination or order, and from whom purchased or rented.

A copy of such statements will be signed by the Engineer's representative, noting thereon any items in question, and will be returned to the Contractor within two working days after submission. This signature shall not be construed as the City's agreement and acceptance of items not questioned since all items are subject to subsequent review and audit by City representatives.

The Contractor, and his subcontractors, when required by the City Officer or the Engineer, must also produce for inspection and audit by designated City representatives, any and all of his books, vouchers, records, daily job diaries and reports, cancelled checks, etc., showing the nature and quantity of labor, materials, and equipment actually used in the performance of the work, and the amounts expended therefor, and the costs incurred for insurance premiums and other items of expense directly chargeable to such work. The Contractor must permit the City's representatives to make extracts therefrom or copies thereof as may be desired.

Failure of the Contractor to comply strictly with these requirements shall constitute a waiver of all or part of any claim for extra compensation on account of the performance of such work.

23. THE ENGINEER

The work under this Contract shall be under the general supervision and control of the City Engineer and shall be subject to his determination, direction, and approval, except where the determination, direction, or approval of someone other than the City Engineer is expressly called for herein.

Without implying any limitation upon the power of the City Engineer, and in addition to those matters elsewhere delegated to the City Engineer and expressly made subject to his determination, direction, or approval, the City Engineer shall have the authority and power:

A. To determine the amount, kind, quality and acceptability of the work to be paid for hereunder, and to reject such work which does not conform to Contract requirements;

B. To determine all questions in relation to the work, to interpret the Contract Drawings, Specifications, and Bulletins, and to resolve all patent inconsistencies or ambiguities therein;

C. To amplify the Contract Drawings and Specifications, add explanatory information and furnish Supplemental Drawings and Specifications consistent with the intent of these Contract Documents;

D. To make changes in the work as he deems necessary provided that such changes do not result in a net change in the cost to the City or the Contractor of work to be done under the Contract or increase the time required for completion;

E. To determine the adequacy of the Contractor's construction methods, plant, and facilities;

F. To require the application of the Contractor's forces to any portion of the work, or the forces increased or diminished, or the work temporarily stopped when, in his judgment, such may be necessary to assure proper performance of the Contract;

G. To determine how the work of this Contract shall be coordinated with the work of other contractors engaged simultaneously on the project of which this Contract is a part, including the power to temporarily stop the work.

The City Engineer, or any of his representatives have no power to change or modify any of the terms and provisions of this Contract in any respect.

A. City Engineer's Representatives: Where the contract Documents expressly provide that certain determinations, directions, or approvals shall be made by the "City Engineer", this shall mean by the City Engineer of the City of Detroit acting personally or, in his absence, by the duly acting City Engineer.

When the Contract Documents provide that the determinations, directions, or approvals shall be made by the "Engineer", this shall mean by the City Engineer acting directly or through duly authorized representatives acting within the limit of authority delegated to them. Any determination, direction, or approval of such authorized representatives shall be subject to review by the City Engineer.

B. **Field Engineer:** The Field Engineer shall be the authorized representative of the City Engineer at the site of the work, and, subject to the review by the City Engineer, shall have the power, in the first instance, to inspect, supervise, and control the performance of the work. The Field Engineer shall not have the power to issue an extra work order, other than an "emergency order" in accordance with Article 19 herein, and performance of such work by the Contractor on order of the Field Engineer without thereafter obtaining written confirmation thereof from the City Officer in accordance with the provisions of Article 19 hereof, shall constitute a waiver of any right to extra compensation therefor. The Field Engineer has no power to change or modify the terms and provisions of this Contract in any respect.

C. City Engineer's Final Determinations: The City Engineer's determinations shall be final relative to the proper performance of the work and the materials used, and the Contractor is bound thereby.

It is hereby covenanted and agreed between the two parties of this Contract that the City Engineer shall review and determine all disputes, controversies, or claims of either party in relation to this Contract or its performance. Such determination shall be made in writing by the City Engineer within a reasonable time and shall be final and conclusive upon both the Contractor and the City. It is further covenanted and agreed between the two parties to this Contract that the determination by the City Engineer shall be a condition precedent to the right of any legal action at law or in equity that either party may have against the other.

24. INSPECTION AND TESTS

During the progress of the work and up to the date of final acceptance, all materials, equipment, and workmanship shall be subject to such inspections and tests by the Engineer, inspectors, or his agents as will give due assurance that all Contract requirements are being fulfilled in all respects. However, neither inspection, testing, approval nor acceptance of the work in whole or in part, by the Engineer, inspectors, or his agents shall relieve the Contractor of full responsibility for materials or equipment furnished, or work performed not in strict accordance with the Contract requirements.

The Contractor shall at all times afford the City's representatives every reasonable, safe, and proper facility, furnish promptly all materials reasonably necessary for testing, and give all necessary information and assistance for inspection and tests of the work done or being done at the site, and also at the places where materials and equipment for the work are being manufactured or prepared. Such inspections and tests by the City's representatives will be performed in such manner as not to delay the work unnecessarily.

A. Required Inspections: Where the Contract Specifications, laws, ordinances, permits, licenses, or the Engineer's instructions require certain work to be specifically inspected, tested, or approved, the Contractor shall give the Engineer timely notice of its readiness for such inspection, test, or approval. If the inspection, test or approval is by others than the Engineer or his inspectors, the Contractor shall give the Engineer sufficient advance notice so that the Engineer, in turn, may make the arrangements with others for the required inspection, tests, or approval. The inspections and tests will be promptly made after a reasonable advance notice.

B. Inspection and Tests Away from Site: Where the Contract Specifications expressly provide for inspection, test, or acceptance of specific materials or equipment, or where the quantities justify, at the place of production, manufacture, or shipment, the Contractor shall give the Engineer ample advance notice to permit such inspection, test, or acceptance. The Contractor shall furnish the Engineer with copies of the purchase orders, shop orders, and such other information as necessary to acquaint the Engineer with the location and intended use of the material or equipment. The Contractor shall make all necessary arrangements with the producers or manufacturers to enable the City's representatives to make the required test, inspection, or acceptance.

Inspections, tests, or acceptance at the place of production, manufacture, or shipment, unless otherwise stated in the Contract Specifications, shall be final, except as regards (a) latent defects, (b) departure from specific Contract requirements, (c) damage or loss in transit, or (d) fraud or such gross mistakes as amount to fraud. Subject to the requirement contained in the preceding sentence, the inspection and test of materials, equipment, and workmanship for final acceptance as a whole or in part will be made at the site.

C. Rejection of Defective Materials and Workmanship: The Engineer, inspectors, or his agents shall have the authority to reject defective materials, equipment, or workmanship or require correction. Unacceptable workmanship shall be satisfactorily corrected. Rejected materials or equipment shall be segregated and promptly removed from the site and replaced with proper materials or equipment.

If the Contractor fails to promptly proceed with the replacement of rejected material or equipment and/or the correction of defective workmanship, the City may, by contract or otherwise, replace such material or equipment and/or correct such workmanship and charge the cost thereof against the Contractor, or may terminate the Contractor's right to proceed as provided in Article 26 herein, the Contractor and Surety being liable for any damage to the same extent as provided in said Article 26 for termination thereunder.

D. **Examination of Completed Work:** If at any time before final acceptance of the entire work, the Engineer should require an examination of work already completed, by removing or tearing it out, the Contractor shall furnish all necessary facilities, labor and materials. If the Engineer finds the work to be defective or nonconforming in any material respect, due to the fault of the Contractor or his subcontractors, the Contractor shall stand all the expense of such examination, the satisfactory reconstruction of the work, and for any resulting delay. However, if the work is found by the Engineer to meet the Contract requirements, the additional work imposed on the Contractor shall be considered an item of extra work to be paid for in accordance with Article 20, hereof, and if the completion of the work of the entire Contract has been delayed thereby, the Contractor shall be granted a suitable extension of time on account of the extra work involved.

However, if the Contractor is required to remove or tear out completed work for examination due to the Contractor's failure to give timely notice to the Engineer of the readiness for such examination, the Contractor shall stand all expenses even though the work is found to meet Contract requirements.

E. Cost of test: Inspections and tests made by the Engineer, inspectors, or his agents will ordinarily be made without cost to the Contractor unless otherwise expressly specified herein. The Contractor shall furnish without additional cost to the City such materials for testing as may be reasonably necessary.

Should, however, the preparation or manufacture of the materials or equipment be at fair distant or inaccessible points, or should it be separated into unreasonably small quantities, or widely distributed to an unreasonable extent, or should the percentage of rejected material or equipment be unreasonably large, the additional cost of such inspection and tests resulting therefrom shall be borne by the Contractor. The City Engineer shall judge what is extra inspection and shall determine the additional cost incurred thereby.

25. NO ESTOPPEL

The City of Detroit, or any officer, employee or agent thereof, shall not be estopped, bound, or precluded by any determination, return, decision, approval, order, letter, payment or certificate made or given by the Engineer or other officer, employee or agent of the City, at any time, either before or after final completion and acceptance of the work and payment therefor from:

A. Showing the true and correct amount, classification, quality, and character of the work done and materials furnished by the Contractor or any other person under this Contract, or from showing at any time that any determination, return, decision, approval, order, letter, payment, or certificate is untrue and incorrect, or improperly made in any particular, or that the work or the materials or any parts thereof, do not in fact conform to the Contract requirements; and

B. From demanding the recovery from the Contractor of any overpayment made to him, or such damages as the City of Detroit may sustain by reason of his failure to perform each and every part of this Contract in strict accordance with its terms; or both.

26. CITY'S RIGHT TO DECLARE CONTRACTOR IN DEFAULT

A. Conditions for Declaring Contractor in Default: In addition to those instances referred to in other Articles herein, the City shall have the right to declare the Contractor in default of the whole or any part of the work if:

a) The Contractor fails to begin work in accordance with the written notice of the City Engineer, acting on behalf of the City.

b) The Contractor refuses, neglects, or fails to supply a sufficiency of properly skilled workmen or proper amount of materials of the specified quality.

c) The Contractor, without just cause, reduces his working force to a number which, if maintained, would be insufficient, in the judgment of the City Engineer, to complete the work in accordance with the approved Progress Schedule, and fails to sufficiently increase such working force when ordered to do so by the City Engineer.

d) The Contractor, in the judgment of the City Engineer, is unnecessarily or unreasonably or willfully delaying the performance and completion of the work, or the awarding of necessary subcontracts, or the placing of material or equipment orders.

e) The Contractor refuses to proceed with work when and as directed by City Engineer.

f) The Contractor abandons the work.

g) The City Engineer be of the opinion that the work can not be completed within the time herein provided or within such time as the completion may have been extended; provided, however, that the impossibility of timely completion is, in the City Engineer's judgment, attributable to conditions within the Contractor's control.

h)The work is not completed within the time herein provided or within the time to which the Contractor may be entitled to have such completion extended.

i) The Contractor shall sublet, assign, transfer, convey, or otherwise dispose of the Contract in whole or in part without prior approval of the City.

j) Contractor fails to make prompt payment for labor/materials or to subcontractors.

k) The Contractor makes an assignment for the benefit of creditors pursuant to the statutes of the State of Michigan.

l) A receiver or receivers are appointed to take charge of Contractor's property or affairs.

m) The Contractor becomes insolvent.

n) Any City Officer or employee becomes directly or indirectly interested in the Contract.

o) The Contractor willfully or in bad faith violates any of the provisions of this Contract, disregards applicable laws, ordinances, permits, licenses, instructions or orders of the Engineer or the City Officer, or is not executing same in good faith in accordance with the Contract provisions.

p) The Contractor, or any of his subcontractors, fail in any of the agreements herein contained.

B. Notice of Intent to Declare Contractor in Default: Before the City shall exercise its right to declare the Contractor in default by reasons of conditions set forth in Sub-Article "A" hereof, the City Officer will give the Contractor and the Surety written notice of the City's intent and the ground or grounds thereof, and designate a time, which may be within two days, at which the Contractor will be given an opportunity to be heard.

C. Exercise of Right to Declare Contractor in Default: If the City Officer finds the Contractor in default for any of the grounds specified or referred to in Sub-Article "A" hereof, he will declare the Contract in default by a written notice to the Contractor and Surety, signed by the City Officer, setting forth the grounds for such default.

In lieu of the above, the City Officer may decide, but is under no obligation to do so, to allow the Contractor a specific number of calendar days, but usually not more than ten, to take such remedial measures to make arrangements satisfactory to the City Officer to remove or eliminate the ground or grounds for declaring default.

D. Quitting the Site: Upon receipt of such notice the Contractor shall immediately discontinue all further operations upon this Contract and shall immediately quit the site, leaving untouched and intact all plant, materials, equipment, tools, supplies, and other construction facilities then on the site.

E. Completion of the Work after Default: The City, after declaring the Contract in default, may then have the work completed by such means and in such manner, by contract with or without public letting, or otherwise, as the City may deem advisable, utilizing for such purpose such of the Contractor's plant, materials, equipment, tools, supplies, and other construction facilities remaining on the site, and also such subcontractors and materialmen as may be deemed advisable.

F. Partial Default: If the City Officer finds the Contractor in default on only a part of the work, the City Engineer shall so declare the Contractor in default as to that part only, by sending a written notice to the Contractor and the Surety. Upon receipt of such notice the Contractor shall discontinue such part which is declared in default, and shall continue to perform the remainder of the work in strict conformity with the terms of the Contract, and shall in no wise hinder or interfere with any other contractors or persons whom the City may engage to complete the work as to which the Contractor was declared in default.

The provisions of this article herein relating to declaring the Contractor in default as to the entire work shall be equally applicable to a declaration of partial default, except that the City shall be entitled to utilize for completion of the part of the work as to which the Contractor was declared in default, only such plant, materials, equipment, tools, supplies, and other construction facilities as had been previously used or were intended to be used by the Contractor on such part.

G. Variance of Contract in Performance of Uncompleted Work: In completing the whole or any part of the work which the City Officer has declared in default, the City shall have the right to depart from or change or vary the terms and provisions of this Contract, provided, however, that such departure, change, or variation is made for the purpose of reducing the time or expense of such completion. Such departure, change, or variation, even to the extent of accepting a lesser or different performance, shall not affect the conclusiveness of the Engineer's final estimate of the cost of completion referred to in Article 8 of the Agreement, nor shall it constitute a defense for action to recover the amount by which such certificate exceeds the amount which would have been payable to the Contractor hereunder but for his default.

H. Contractor's Liability for Cost of Completing Work: The Contractor shall not be entitled to receive any further payments on the work declared in default until such work has been fully completed. After such completion, the City Engineer shall make a certified statement of the expense incurred by the City in such completion, which shall include the cost of re-letting the Contract, additional engineering and administrative services, and also the total amount of liquidated damages, if any, at the rate stipulated herein, from the date when the work should have been completed by the Contractor in accordance with the terms hereof to the date of actual completion of the work.

In event the amount of work required for completion has been reduced in accordance with the provisions of Sub-Article "G", herein, the estimated cost of the original work shall be estimated by the City Engineer and the Contract price adjusted accordingly.

Such certificate shall be binding and conclusive upon the Contractor, his surety, and any person claiming under the Contract, as to the amount thereof. The expense of such completion, as certified to by the City Engineer, shall be charged against and deducted out of such monies as would have been payable to the Contractor if he had completed the work. The balance of such monies, if any, subject to other provisions of this Contract, will be paid to the Contractor without interest after such completion. Should the expense of such completion, so certified by the City Engineer, exceed the total sum which would have been payable under this Contract if the Contract had been completed by the Contractor, any such excess shall be paid by the Contractor to the City on demand.

Other Remedies: The previous provisions outlined herein shall be in addition to any and all other legal or equitable remedies, permissible in the premises.

27. TERMINATION OF CONTRACT DUE TO SPECIAL EMERGENCY

In entering into this Contract, it is clearly understood and recognized by both parties that conditions may subsequently

arise, due to Governmental controls on construction or Court orders which are entirely beyond the control of either party and could not have been reasonably anticipated or guarded against by either party and could not have been reasonably anticipated or guarded against by either party at the time of entering into this Contract, that may hinder, delay, or render temporarily impossible the performance of this Contract in accordance with its terms and conditions.

It is therefore, mutually understood and agreed, anything elsewhere contained in the Contract notwithstanding that if the Contractor shall be specifically prevented by any Federal law, order, or regulation, or stopped by order or injunction issued by a Court of proper jurisdiction, from proceeding with the performance of this Contract, the following procedure shall govern:

The contractor shall notify, in writing, the City Officer and City Engineer, of his inability to continue to perform stating in full the cause therefor and the probable duration of such inability, and why, in his opinion, the cause is entirely beyond his control.

If it is determined, in the judgment of the City Engineer, that the cause of the Contractor's inability to continue to perform arose after the Contract was entered into, and is due solely because of Government controls on construction which specifically apply to the work to be done under this contract, or by a Court order or injunction, and is entirely beyond the control of the Contractor, the City shall have a period of 120 days, or longer by mutual consent of the parties, after receipt of the Contractor's notification to:

A. If lawfully within its power, remove or have removed the cause which prevents performance.

B. Make changes in the work or the conditions under which it must be done, pursuanted to Article 19 herein, which will permit performance by the Contractor.

If and when the cause preventing performance has been removed, the time for completion shall be extended by the City Officer, in accordance with the provisions of Article 18 herein, commensurate with the time the Contractor was unable to perform the Contract.

If at the end of 120 days or the longer period mutually agreed to, the cause of inability to perform the Contract has not been removed, the Contract shall be considered terminated by written notice of either of the parties hereto to the other. The Contract may also be terminated prior to the 120 days by mutual consent of the parties.

If the Contract should be terminated, it is the City's intent that an equitable settlement be made with the Contractor. No claim, however, for damages or anticipated profits shall be made or allowed. All completed or partially completed work will be paid for at Contract unit prices, or at unit prices contained in the approved Detailed Estimate when, in the judgment of the City Engineer, such unit prices are deemed applicable. For any necessary work required by the Contract deemed by the City Engineer as not compensated for by applicable unit prices, the Contractor shall be paid the actual costs incurred by him, plus 15 percent to cover superintendence, use of ordinary tools, bonds, overhead expense and profit. "Actual costs" as herein used, shall be determined in accordance with Article 20C herein. The payment shall be made under the terms and conditions governing final payment as provided for in "Acceptance and Final Payment" of the Agreement.

28. SUBCONTRACTS

The Contractor shall not make any subcontracts for performing any portion of the work included in the Contract without the written approval of the Engineer. This Contract having been made pursuant to the bid submitted by the Contractor and in reliance upon the Contractor's personal qualifications and responsibility, the City reserves the right to withhold approval of subcontracting such portions of the work which the City may deem would not be in the City's best interest.

The Contractor shall, as soon as practical after signing the Contract, submit a separate written request to Engineer for approval of each proposed subcontractor. Each request shall be on the forms provided by the Engineer and shall give the name and address of the proposed subcontractor, the portion and the approximate cost of the work to be sublet, and evidence of insurance coverage carried by the proposed subcontractor. Upon request of the Engineer, the Contractor shall promptly furnish such additional information tending to establish that the proposed subcontractor has the necessary facilities, skill, integrity, past experience, and financial resources to perform the work in accordance with the terms and conditions of this Contract.

If the Engineer determines that the proposed subcontractor is acceptable to the City, he will so indicate his approval by signing and returning one copy of the form to the Contractor. If the determination is to the contrary, however, the City Engineer will so notify the Contractor, who may thereupon submit another proposed subcontractor unless the Contractor decides to do the work himself.

Each subcontract entered into shall provide that the provisions of this Contract shall apply to such subcontractor and his officers and employees in all respects as if he and they were employees of the Contractor. The Engineer's approval of any subcontractor shall not relieve the Contractor of any of his responsibilities, duties, and liabilities hereunder. The Contractor shall be solely responsible to the City for the acts or defaults of his subcontractor and of such sub-contractor's officers, agents, and employees, each of whom shall, for this purpose, be deemed to be the agent or employee of the Contractor to the extent of his subcontract.

The Contractor agrees to bind each subcontractor, and each subcontractor agrees to be bound by the terms of the Contract Documents insofar as applicable to his work. The Contractor and each subcontractor jointly and severally agree that no approval by the City of any proposed subcontractor, nor any subcontract, nor anything in the Contract Documents shall create or be deemed to create any rights in favor of a subcontractor and against the City, nor shall be deemed or construed to impose upon the City any obligation, liability, or duty to a subcontractor, or to create any contractual relation whatsoever between a subcontractor and the City.

The provisions contained herein shall likewise apply to subletting of any portion of the work included in a previously approved subcontract.

29. ASSIGNMENTS

The Contractor shall not assign, transfer, convey, or otherwise dispose of this Contract, or his right to execute it, or his right, title or interest in it or any part thereof without the previous written consent of the Surety Company and the written approval of the City Officer, and then only with the prior approval of the City Council. The City Officer will ordinarily not favorably consider an assignment, transfer, or conveyance of the Contract unless an exigency occurs which was not known or could not have been foreseen by the Contractor at the time of bidding, or which is not judged to be in the best interest of the City.

The Contractor shall not assign, either legally or equitably, by power of attorney or otherwise, any of the monies due or to become due under this Contract or his claim thereto without the prior written consent of the Surety Company and the written approval of the City Officer and the Finance Department.

The approval by the City Officer of a particular assignment, transfer, or conveyance shall not dispense with such approval to any further or other assignments.

The approval of the City Officer of any assignment, transfer, or conveyance shall not operate to release the Contractor or Surety hereunder from any of the Contract obligations.

30. CLAIMS AGAINST CITY AND ACTION THEREON

No claim against the City for damages for breach of contract or compensation for extra work shall be made or asserted in any action or proceedings at law or in equity, unless the Contractor shall have strictly complied with all requirements relating to the giving of notice and information with respect to such claims all as hereinbefore provided.

31. NO CLAIMS AGAINST THE CITY ENGINEERS, EMPLOYEES, OR AGENTS:

No claim whatsoever shall be made by Contractor against any officer, employee, or agent of the City of Detroit for, or on account of, anything done or omitted to be done in connection with this Contract.

32. PATENTS:

The Contractor shall pay all royalties and license fees and shall hold and save the City and its officers, employees, and agents harmless from all liability of any nature or kind, including cost and expenses, for, or account of, any patented or unpatented invention, process, article, or appliance manufactured or used in the performance of the Contract, including its use by the City, unless otherwise specifically stipulated in Contract Documents. In this respect the Contractor shall defend all suits or claims for infringement of any patent or license right.

In the event that any claim, suit, or action at law or in equity of any kind, whatsoever, is brought against the City, or its officers, employees, or agents, involving any such patents or license rights, then the City shall have the right to, and may, retain from any money due or to become due to the Contractor, such sufficient sum as is considered necessary to protect said City, or its officers, employees, or agents against loss, and such sum may be retained by the City until such claim or suit shall have been settled and satisfactory evidence to that effect shall have been furnished the City.

33. MONIES RETAINED AGAINST CLAIMS

If any claim shall be made by any person, firm, or corporation, including other contractors with the City on this project, against the City, or against the Contractor and the City for:

a) Alleged loss, damage, or injury of the nature referred to in Article 5 hereof which, in the opinion of the Corporation Counsel, may not be covered by the public liability, property damage or contingent liability insurance policies, or, which, together with previously filed claims is in excess of the amount payable under such policies; or

b) All infringement of patents or use of patented articles, tools, or other things, as referred to in Article 32 hereof; or

c) Damage claimed to have been caused directly or indirectly by the failure of the Contractor to perform the work in strict accordance with this Contract;

the amount of such claim or so much thereof as the City Officer may deem necessary, may be withheld by the City, as security against such claim, from any money due hereunder, until such time as the commencement of an action thereon would be barred by law or until final adjudication of such action by a court of competent jurisdiction. The Corporation Counsel, in his discretion, may permit the Contractor to substitute other satisfactory security in lieu of the monies so withheld.

If no action is commenced upon such claim within a time limited therefor by law, the City, upon written demand of the Contractor and approval by the Corporation Counsel, shall return the amount so withheld without interest.

If any action on such claim is timely commenced and the liability of the City, or the Contractor, or both, shall have been established therein by final judgment of a court of competent jurisdiction, or if such claim shall be admitted by the Contractor to be valid, the City shall pay such judgment or admitted claim out of the monies retained by the City under the provisions of this Article, and return the balance, if any, without interest to the Contractor.

34. PAYMENTS WITHHELD

In addition to express provisions elsewhere contained in the Contract, the City may withhold from any payment otherwise due the Contractor, such amount as determined necessary to protect the City's interest, or, if it so elects, may withhold or nullify the whole of any progress payment, on account of:

a) Unsatisfactory progress of the work not caused by conditions beyond the Contractor's control

b) Defective work not corrected.

c) Contractor's failure to carry out instructions or order of the Engineer or the City Engineer.

d) Claims filed or reasonable evidence of probable filing of claims against the contractor.

e) Damage to another contractor.

f) A reasonable doubt that the Contract can be completed for the balance then unpaid.

g) Failure of the Contractor to make proper payments to subcontractors or for materials or labor.

35. SERVICE OF NOTICES

The following addresses are hereby designated as places where all notices, directions, or other communication may be delivered, or to which they must be mailed:

Contractor: The business address designated in his proposal, or his office maintained at the site of the work.

City: The address of the City Officer stated in the Special Notice to Bidders as acting on behalf of the City of Detroit in this Contract.

City Engineer: The address stated in the Advertisement.

Surety or Sureties on Contract Bonds: The home office, or to the agent or agents who executed the bonds on behalf of the Surety or Sureties.

Actual delivery of any such notice, direction, or communication to the aforesaid places, or depositing it in a postpaid wrapper addressed thereto in any post office box regularly maintained by the United States Post Office Department shall be conclusively deemed to be sufficient service thereof upon the above persons as of the date of such delivery or deposit.

The above address may be changed at any time by an instrument in writing executed and acknowledged by the party changing the address and delivered to the other party or parties.

Nothing herein contained shall, however, be deemed to preclude or tender inoperative the service of any notice, direction, or communication upon the above parties personally, or, if the Contractor be a corporation, upon any officer or director thereof.

36. FAIR EMPLOYMENT PRACTICES

The contractor agrees that he will not discriminate against any employee or applicant for employment, to be employed in the performance of this Contract with respect to his hire, tenure, terms, conditions or privileges of employment or any matter directly or indirectly related to employment because of his age, except when based on a bona fide occupation qualification or because of his race, color, religion, national origin or ancestry. (Act No. 251 P.A. 1955, as amended).

The Contractor further agrees that he will take affirmative action to insure that applicants are employed and that employees are treated during employment without regard to age, sex, race, creed, color or national origin. Affirmative action shall mean: 1) The issuance of a statement of policy regarding equal employment opportunity and its communication to all personnel involved in recruitment, hiring, training, assignment and promotion; 2) Notification of all employment sources of company policy and active efforts to review the qualifications of all applicants regardless of age, sex, race, creed, color or national origin; 3) Recruiting in the minority group community for employees; and 4) Establishing an internal system of reporting concerning equal employment, recruiting, hiring, upgrading and the like. (City of Detroit Ordinance No. 206-G)

The Contractor shall not discriminate against an employee or applicant for employment to be employed in the performance of this contract with respect to his hire; tenure, terms, conditions, or privileges of employment because of any physical limitation. This provision shall not apply if such physical limitation prevents the employee or applicant from performing the work involved, or would place the employer in violation of any law or regulation relating to the safety of employees or others or would require extraordinary action on the part of the employer. (City of Detroit Ordinance 206-G and 851-G)

Breach of these covenants may be regarded as a material breach of the contract.

The contractor further agrees that he will require a similar covenant on the part of any subcontractor employed in the performance of this contract.

37. DETROIT INCOME TAX

The Contractor and each subcontractor shall comply with the provisions of Detroit Income Tax Ordinance No. 694-F, as amended to date, by withholding from employees' earnings such amounts as required by the Ordinance.

As a condition precedent to final payment under the Contract, in addition to the requirements of Article 8B of the Agreement, the Contractor shall file with and on forms provided by the Engineer, an affidavit for himself and one for each subcontractor that the required amounts have been withheld from employees' earnings and that such amounts have or will be paid to the City of Detroit in accordance with the above Ordinance.

38. UNLAWFUL PROVISIONS DEEMED STRICKEN

If this Contract contains any unlawful provisions not an essential part of the Contract and which shall not appear to have been a controlling or material inducement to the making thereof, such unlawful provisions shall be of no effect. Upon the application of either party, the unlawful part shall be considered stricken from Contract without affecting remainder of Contract.

39. ALL LEGAL PROVISIONS INCLUDED

It is the intent and agreement of the parties to this Contract that all legal provisions of law required to be inserted herein, shall be and are inserted herein. However, if through mistake or otherwise, any such provision is not herein inserted, or is not inserted in proper form, then upon application of either party, the Contract shall be amended so as to strictly comply with the law and without prejudice to the rights of either party hereunder.

PREVAILING WAGE RATES FOR PW-6971

Official 2015 Prevailing Wage Rate Schedule
for Parking Lot, Road, Highway, Bridge and Airport Construction

Construction Mechanic Classification			Straight Time Rate	Time and One Half Rate	Double Time Rate	Overtime Code
Bridge Painter						
Bridge Painter (under 30 feet)	BPT1011	WAGE	$24.15	$36.23	$48.30	H H H H H H H D N
	8/7/2014	FRINGE	$11.14	$11.14	$11.14	
Apprentice Rates:						
1st 1,000 hours		WAGE	$14.49	$21.74	$28.98	
		FRINGE	$11.14	$11.14	$11.14	
2nd 1,000 hours		WAGE	$15.70	$23.55	$31.40	
		FRINGE	$11.14	$11.14	$11.14	
3rd 1,000 hours		WAGE	$16.90	$25.35	$33.80	
		FRINGE	$11.14	$11.14	$11.14	
4th 1,000 hours		WAGE	$18.11	$27.16	$36.22	
		FRINGE	$11.14	$11.14	$11.14	
5th 1,000 hours		WAGE	$19.32	$28.98	$38.64	
		FRINGE	$11.14	$11.14	$11.14	
6th 1,000 hours		WAGE	$20.53	$30.80	$41.06	
		FRINGE	$11.14	$11.14	$11.14	
7th 1,000 hours		WAGE	$21.74	$32.61	$43.48	
		FRINGE	$11.14	$11.14	$11.14	
8th 1,000 hours		WAGE	$22.94	$34.41	$45.88	
		FRINGE	$11.14	$11.14	$11.14	

Entire Upper Pennisula
Entire Upper Pennisula

Official 2015 Prevailing Wage Rate Schedule
for Parking Lot, Road, Highway, Bridge and Airport Construction

Construction Mechanic Classification			Straight Time Rate	Time and One Half Rate	Double Time Rate	Overtime Code
CEMENT MASONS						
CEMENT MASONS ZONE 1	RBCMZ1	WAGE	$29.79	$44.69		X X H X X H H H Y
	8/7/2014	FRINGE	$12.59	$12.59		
Apprentice Rates:						
1ST YEAR		WAGE	$17.31	$25.96		
		FRINGE	$12.59	$12.59		
2ND YEAR		WAGE	$21.44	$32.16		
		FRINGE	$12.59	$12.59		
3RD YEAR		WAGE	$25.58	$38.37		
		FRINGE	$12.59	$12.59		

CEMENT MASONS ZONE 1
Genesee, Oakland, Macomb, Monroe, Washtenaw, Wayne, Livingston and Saginaw Counties.

CEMENT MASONS ZONE 2	RBCMZ2	WAGE	$28.29	$42.44		X X H X X H H H Y
	8/7/2014	FRINGE	$12.59	$12.59		
Apprentice Rates:						
1ST YEAR		WAGE	$16.48	$24.72		
		FRINGE	$12.59	$12.59		
2ND YEAR		WAGE	$20.43	$30.64		
		FRINGE	$12.59	$12.59		
3RD YEAR		WAGE	$24.60	$36.90		
		FRINGE	$12.59	$12.59		

CEMENT MASONS ZONE 2
All counties not listed in Zone 1

Official 2015 Prevailing Wage Rate Schedule
for Parking Lot, Road, Highway, Bridge and Airport Construction

Construction Mechanic Classification			Straight Time Rate	Time and One Half Rate	Double Time Rate	Overtime Code
IRONWORKERS ZONE 2: Fence, sound barrier and guardrail erection/installation work, and exterior signage work.	RBIRZ2 8/13/2014	WAGE	$20.49	$30.74	$40.98	X X H X X X H D Y
	8/13/2014	FRINGE	$9.71	$9.71	$9.71	
Apprentice Rates:						
60%		WAGE	$12.29	$18.44	$24.58	
		FRINGE	$8.35	$8.35	$8.35	
65%		WAGE	$13.32	$19.98	$26.64	
		FRINGE	$8.45	$8.45	$8.45	
70%		WAGE	$14.34	$21.51	$28.68	
		FRINGE	$8.56	$8.56	$8.56	
75%		WAGE	$15.37	$23.06	$30.74	
		FRINGE	$8.65	$8.65	$8.65	
80%		WAGE	$16.39	$24.58	$32.78	
		FRINGE	$8.75	$8.75	$8.75	
85%		WAGE	$17.42	$26.13	$34.84	
		FRINGE	$8.85	$8.85	$8.85	

IRONWORKERS ZONE 2
The entire state except those counties listed in Zone 1:Genesee, Oakland, Macomb, Monroe, Washtenaw and Wayne and Lenawee

LABORERS CLASS 1 ZONE 1	RBLABC1Z1 8/11/2014	WAGE	$21.90	$32.85		X X X X X X X H Y
		FRINGE	$15.76	$17.17		
Apprentice Rates:						
0-1000 WORK HOURS		WAGE	$16.42	$24.63		
		FRINGE	$15.76	$17.17		
1001-2000 WORK HOURS		WAGE	$17.52	$26.28		
		FRINGE	$15.76	$17.17		
2001-3000 WORK HOURS		WAGE	$18.61	$27.92		
		FRINGE	$15.76	$17.17		
3001-4000 WORK HOURS		WAGE	$20.80	$31.20		
		FRINGE	$15.76	$17.17		

LABORERS ZONE 1
Genesee, Macomb, Monroe, Oakland, Washtenaw and Wayne

Official 2015 Prevailing Wage Rate Schedule
for Parking Lot, Road, Highway, Bridge and Airport Construction

Construction Mechanic Classification			Straight Time Rate	Time and One Half Rate	Double Time Rate	Overtime Code
LABORERS CLASS 2 ZONE 1	RBLABC2Z1	WAGE	$22.03	$33.05		X X X X X X X H Y
	8/8/2014	FRINGE	$15.76	$17.17		
Apprentice Rates:						
0-1000 WORK HOURS		WAGE	$16.52	$24.78		
		FRINGE	$15.76	$17.17		
1001-2000 WORK HOURS		WAGE	$17.62	$26.43		
		FRINGE	$15.76	$17.17		
2001-3000 WORK HOURS		WAGE	$18.73	$28.10		
		FRINGE	$15.76	$17.17		
3001-4000 WORK HOURS		WAGE	$20.93	$31.40		
		FRINGE	$15.76	$17.17		

LABORERS ZONE 1
Genesee, Macomb, Monroe, Oakland, Washtenaw and Wayne

LABORERS CLASS 2 ZONE 2	RBLABC2Z2	WAGE	$20.26	$30.39		X X X X X X X H Y
	8/8/2014	FRINGE	$15.55	$16.88		
Apprentice Rates:						
0-1000 WORK HOURS		WAGE	$15.20	$22.80		
		FRINGE	$15.55	$16.88		
1001-2000 WORK HOURS		WAGE	$16.21	$24.32		
		FRINGE	$15.55	$16.88		
2001-3000 WORK HOURS		WAGE	$17.22	$25.83		
		FRINGE	$15.55	$16.88		
3001-4000 WORK HOURS		WAGE	$19.25	$28.88		
		FRINGE	$15.55	$16.88		

LABORERS ZONE 2
Allegan, Barry, Bay, Berrien, Branch, Calhoun, Cass, Clinton, Eaton, Gratiot, Hillsdale, Huron, Ingham, Jackson, Kalamazoo, Lapeer, Lenawee, Livingston, Midland, Muskegon, Saginaw, Sanilac, Shiawassee, St. Clair, St. Joseph, Tuscola, and Van Buren

Official 2015 Prevailing Wage Rate Schedule
for Parking Lot, Road, Highway, Bridge and Airport Construction

Construction Mechanic Classification			Straight Time Rate	Time and One Half Rate	Double Time Rate	Overtime Code
LABORERS CLASS 3 ZONE 2	RBLABC3Z2	WAGE	$20.50	$30.75		X X X X X X X H Y
	8/8/2014	FRINGE	$15.55	$16.88		
Apprentice Rates:						
0-1000 WORK HOURS		WAGE	$15.38	$23.07		
		FRINGE	$15.55	$16.88		
1001-2000 WORK HOURS		WAGE	$16.40	$24.60		
		FRINGE	$15.55	$16.88		
2001-3000 WORK HOURS		WAGE	$17.42	$26.13		
		FRINGE	$15.55	$16.88		
3001-4000 WORK HOURS		WAGE	$19.47	$29.20		
		FRINGE	$15.55	$16.88		

LABORERS ZONE 2
Allegan, Barry, Bay, Berrien, Branch, Calhoun, Cass, Clinton, Eaton, Gratiot, Hillsdale, Huron, Ingham, Jackson, Kalamazoo, Lapeer, Lenawee, Livingston, Midland, Muskegon, Saginaw, Sanilac, Shiawassee, St. Clair, St. Joseph, Tuscola, and Van Buren

LABORERS CLASS 3 ZONES 3 & 4	RBLABC3Z3	WAGE	$19.81	$29.72		X X X X X X X H Y
	8/8/2014	FRINGE	$15.55	$16.88		
Apprentice Rates:						
0-1000 WORK HOURS		WAGE	$14.86	$22.29		
		FRINGE	$15.55	$16.88		
1001-2000 WORK HOURS		WAGE	$15.85	$23.78		
		FRINGE	$15.55	$16.88		
2001-3000 WORK HOURS		WAGE	$16.84	$25.26		
		FRINGE	$15.55	$16.88		
3001-4000 WORK HOURS		WAGE	$18.82	$28.23		
		FRINGE	$15.55	$16.88		

LABORERS ZONE 3
Alcona, Alpena, Antrim, Arenac, Benzie, Charlevoix, Cheboygan, Clare, Crawford, Emmet, Gladwin, Grand Traverse, Ionia, Iosco, Isabella, Kalkaska, Kent, Lake, Leelanau, Manistee, Mason, Mecosta, Missaukee, Montcalm, Montmorency, Newaygo, Oceana, Ogemaw, Osceola, Oscoda, Otsego, Ottawa, Presque Isle, Roscommon and Wexford

LABORERS ZONE 4
Alger, Baraga, Chippewa, Delta, Dickinson, Gogebic, Houghton, Iron, Keweenaw, Luce, Mackinac, Marquette, Menominee, Ontonagon and Schoolcraft

Official 2015 Prevailing Wage Rate Schedule
for Parking Lot, Road, Highway, Bridge and Airport Construction

Construction Mechanic Classification			Straight Time Rate	Time and One Half Rate	Double Time Rate	Overtime Code
LABORERS CLASS 4 ZONES 3 & 4	RBLABC4Z3	WAGE	$20.25	$30.38		X X X X X X X H Y
	8/8/2014	FRINGE	$15.55	$16.88		
Apprentice Rates:						
0-1000 WORK HOURS		WAGE	$15.19	$22.78		
		FRINGE	$15.55	$16.88		
1001-2000 WORK HOURS		WAGE	$16.20	$24.30		
		FRINGE	$15.55	$16.88		
2001-3000 WORK HOURS		WAGE	$17.21	$25.82		
		FRINGE	$15.55	$16.88		
3001-4000 WORK HOURS		WAGE	$19.24	$28.86		
		FRINGE	$15.55	$16.88		

LABORERS ZONE 3
Alcona, Alpena, Antrim, Arenac, Benzie, Charlevoix, Cheboygan, Clare, Crawford, Emmet, Gladwin, Grand Traverse, Ionia, Iosco, Isabella, Kalkaska, Kent, Lake, Leelanau, Manistee, Mason, Mecosta, Missaukee, Montcalm, Montmorency, Newaygo, Oceana, Ogemaw, Osceola, Oscoda, Otsego, Ottawa, Presque Isle, Roscommon and Wexford

LABORERS ZONE 4
Alger, Baraga, Chippewa, Delta, Dickinson, Gogebic, Houghton, Iron, Keweenaw, Luce, Mackinac, Marquette, Menominee, Ontonagon and Schoolcraft

LABORERS CLASS 5 ZONE 1	RBLABC5Z1	WAGE	$22.50	$33.75		X X X X X X X H Y
	8/8/2014	FRINGE	$15.76	$17.17		
Apprentice Rates:						
0-1000 WORK HOURS		WAGE	$16.88	$25.32		
		FRINGE	$15.76	$17.17		
1001-2000 WORK HOURS		WAGE	$18.00	$27.00		
		FRINGE	$15.76	$17.17		
2001-3000 WORK HOURS		WAGE	$19.12	$28.68		
		FRINGE	$15.76	$17.17		
3001-4000 WORK HOURS		WAGE	$21.38	$32.07		
		FRINGE	$15.76	$17.17		

LABORERS ZONE 1
Genesee, Macomb, Monroe, Oakland, Washtenaw and Wayne

Official 2015 Prevailing Wage Rate Schedule
for Parking Lot, Road, Highway, Bridge and Airport Construction

Construction Mechanic Classification			Straight Time Rate	Time and One Half Rate	Double Time Rate	Overtime Code
LABORERS CLASS 6 ZONE 1	RBLABC6Z1	WAGE	$22.80	$34.20		X X X X X X X H Y
	8/8/2014	FRINGE	$15.76	$17.17		
Apprentice Rates:						
0-1000 WORK HOURS		WAGE	$17.10	$25.65		
		FRINGE	$15.76	$17.17		
1001-2000 WORK HOURS		WAGE	$18.24	$27.36		
		FRINGE	$15.76	$17.17		
2001-3000 WORK HOURS		WAGE	$19.38	$29.07		
		FRINGE	$15.76	$17.17		
3001-4000 WORK HOURS		WAGE	$21.66	$32.49		
		FRINGE	$15.76	$17.17		

LABORERS ZONE 1
Genesee, Macomb, Monroe, Oakland, Washtenaw and Wayne

LABORERS CLASS 6 ZONE 2	RBLABC6Z2	WAGE	$21.06	$31.59		X X X X X X X H Y
	8/8/2014	FRINGE	$15.55	$16.88		
Apprentice Rates:						
0-1000 WORK HOURS		WAGE	$15.80	$23.70		
		FRINGE	$15.55	$16.88		
1001-2000 WORK HOURS		WAGE	$16.85	$25.28		
		FRINGE	$15.55	$16.88		
2001-3000 WORK HOURS		WAGE	$17.90	$26.85		
		FRINGE	$15.55	$16.88		
3001-4000 WORK HOURS		WAGE	$20.01	$30.02		
		FRINGE	$15.55	$16.88		

LABORERS ZONE 2
Allegan, Barry, Bay, Berrien, Branch, Calhoun, Cass, Clinton, Eaton, Gratiot, Hillsdale, Huron, Ingham, Jackson, Kalamazoo, Lapeer, Lenawee, Livingston, Midland, Muskegon, Saginaw, Sanilac, Shiawassee, St. Clair, St. Joseph, Tuscola, and Van Buren

Official 2015 Prevailing Wage Rate Schedule
for Parking Lot, Road, Highway, Bridge and Airport Construction

Construction Mechanic Classification			Straight Time Rate	Time and One Half Rate	Double Time Rate	Overtime Code
LABORERS CLASS 7 ZONE 1	RBLABC7Z1	WAGE	$23.87	$35.81		X X X X X X X H Y
	8/8/2014	FRINGE	$15.76	$17.17		
Apprentice Rates:						
0-1000 WORK HOURS		WAGE	$17.90	$26.85		
		FRINGE	$15.76	$17.17		
10001-2000 WORK HOURS		WAGE	$19.10	$28.65		
		FRINGE	$15.76	$17.17		
2001-3000 WORK HOURS		WAGE	$20.29	$30.44		
		FRINGE	$15.76	$17.17		
3001-4000 WORK HOURS		WAGE	$22.68	$34.02		
		FRINGE	$15.76	$17.17		

LABORERS ZONE 1
Genesee, Macomb, Monroe, Oakland, Washtenaw and Wayne

OPERATING ENGINEERS

OPERATING ENGINEERS CLASS I ZONE 1& 2	RBOEC1Z1	WAGE	$26.31	$39.47		H H H H H H H H Y
	8/11/2014					
	8/11/2014	FRINGE	$25.96	$27.94		
Apprentice Rates:						
1ST 6 MONTHS		WAGE	$18.42	$27.63		
		FRINGE	$24.96	$26.94		
2ND 6 MONTHS		WAGE	$19.73	$29.60		
		FRINGE	$24.96	$26.94		
3RD 6 MONTHS		WAGE	$21.05	$31.58		
		FRINGE	$24.96	$26.94		
4TH 6 MONTHS		WAGE	$22.36	$33.54		
		FRINGE	$24.96	$26.94		
5TH 6 MONTHS		WAGE	$23.68	$35.52		
		FRINGE	$24.96	$26.94		
6TH 6 MONTHS		WAGE	$24.99	$37.48		
		FRINGE	$24.96	$26.94		

OPERATING ENGINEERS ZONE 1
Genesee, Oakland, Macomb, Monroe, Washtenaw and Wayne counties

OPERATING ENGINEERS ZONE 2
The entire state except those counties listed in Zone 1:Genesee, Oakland, Macomb, Monroe, Washtenaw and Wayne

Official 2015 Prevailing Wage Rate Schedule
for Parking Lot, Road, Highway, Bridge and Airport Construction

Construction Mechanic Classification			Straight Time Rate	Time and One Half Rate	Double Time Rate	Overtime Code
OPERATING ENGINEERS CLASS III ZONE 1	RBOEC3Z1 8/11/2014	**WAGE**	$19.97	$29.96		H H H H H H H H Y
	8/11/2014	**FRINGE**	$25.01	$26.51		

OPERATING ENGINEERS ZONE 1
Genesee, Oakland, Macomb, Monroe, Washtenaw and Wayne counties

OPERATING ENGINEERS CLASS III ZONE 2	RBOEC3Z2 8/11/2014	**WAGE**	$19.84	$29.76		H H H H H H H H Y
	8/11/2014	**FRINGE**	$24.99	$26.48		

OPERATING ENGINEERS ZONE 2
The entire state except those counties listed in Zone 1:Genesee, Oakland, Macomb, Monroe, Washtenaw and Wayne

OPERATING ENGINEERS CLASS IV ZONE 1	RBOEC4Z1 8/11/2014	**WAGE**	$19.83	$29.75		H H H H H H H H Y
	8/11/2014	**FRINGE**	$24.98	$26.47		

OPERATING ENGINEERS ZONE 1
Genesee, Oakland, Macomb, Monroe, Washtenaw and Wayne counties

OPERATING ENGINEERS CLASS IV ZONE 2	RBOEC4Z2 8/11/2014	**WAGE**	$19.56	$29.34		H H H H H H H H Y
	8/11/2014	**FRINGE**	$24.95	$26.42		

OPERATING ENGINEERS ZONE 2
The entire state except those counties listed in Zone 1:Genesee, Oakland, Macomb, Monroe, Washtenaw and Wayne

Official 2015 Prevailing Wage Rate Schedule
for Parking Lot, Road, Highway, Bridge and Airport Construction

Construction Mechanic Classification			Straight Time Rate	Time and One Half Rate	Double Time Rate	Overtime Code
Boiler Operator: unit driver and operator of steam/water heater units and all ancillary equipment associated	TM247-4 10/15/2012	WAGE	$23.99	$35.99		H H H H H H H H N
	10/15/2012	FRINGE	$8.21	$8.21		

Statewide

Combo Unit driver & Jetter-Vac Operator	TM247-5 10/15/2012	WAGE	$23.99	$35.99		H H H H H H H H N
	10/15/2012	FRINGE	$8.21	$8.21		

Statewide

Pipe Bursting & Slip-lining Equipment Operator	TM247-6 10/15/2012	WAGE	$24.99	$37.49		H H H H H H H H N
	10/15/2012	FRINGE	$8.21	$8.21		

Statewide

Official 2015 Prevailing Wage Rate Schedule
for Parking Lot, Road, Highway, Bridge and Airport Construction

Construction Mechanic Classification			Straight Time Rate	Time and One Half Rate	Double Time Rate	Overtime Code
Groundman	EC-17G	WAGE	$26.63	$39.95	$53.26	H H H H H H H D Y
	8/26/2014	FRINGE	$12.71	$16.44	$20.17	
TRUCK DRIVERS						
TRUCK DRIVERS ZONE 1 EUCLID TYPE EQUIPMENT	TD1	WAGE	$25.15	$37.73		H H H H H H H H Y
	8/7/2014					
	8/7/2014	FRINGE	$17.39	$0.50		
TRUCK DRIVERS ZONE 1 Genesee, Oakland, Macomb, Monroe, Livingston, Washtenaw and Wayne						
TRUCK DRIVERS ZONE 2 EUCLID TYPE EQUIPMENT	TD2	WAGE	$25.05	$37.58		H H H H H H H H Y
	8/7/2014					
	8/7/2014	FRINGE	$17.39	$0.50		
TRUCK DRIVERS ZONE 2 The entire state except those counties listed in Zone 1: Genesee, Oakland, Macomb, Monroe, Livingston, Washtenaw and Wayne						
TRUCK DRIVERS ZONE 1 8 YARD CAPACITY OR GREATER	TD81	WAGE	$25.00	$37.50		H H H H H H H H Y
	8/7/2014					
	8/7/2014	FRINGE	$17.39	$0.50		
TRUCK DRIVERS ZONE 1 Genesee, Oakland, Macomb, Monroe, Livingston, Washtenaw and Wayne						

SECTION II

SPECIFICATIONS

The Improvements covered by these plans are based on the Michigan Department of Transportation Local Agency Program guidelines for Geometrics (3R) dated August 28, 2008. Except where otherwise indicated on these plans or in the Proposal and Supplemental Specifications contained therein, all materials and workmanship shall be in accordance with the Michigan Department of Transportation Standard Specifications for Construction, 2012 version and the Michigan Manual of Uniform Traffic Control Devices, 2009 edition.

SECTION III

DRAWINGS AND SPECIAL PROVISIONS

CITY OF DETROIT
SPECIAL PROVISION
FOR
MAINTAINING TRAFFIC

DET: UP
JJR: BPC

Revised: 05-18-2012
Revised: 04-25-2011

GENERAL REQUIREMENTS

Traffic shall be maintained throughout the project in accordance with 2012 MDOT Standard Specifications for construction, including any supplemental specifications, and as herein specified. All traffic control devices shall conform to the 2011 Revised Edition of the Michigan Manual of Uniform Traffic Control Devices.

City of Detroit maintenance crews and/or Contract Maintenance Agencies may perform maintenance work within or adjacent to the Construction Influence Area (CIA). The Maintenance Division of City of Detroit and or Contract Maintenance Agency will coordinate their operations with the Engineer to minimize the interference to the Contractor. No additional payment will be made to the Contractor for the joint use of the traffic control items.

MAINTENANCE OF TRAFFIC

- Walks, driveways, alleys and entrances to buildings shall not be blocked.
- The required number of lanes shall be maintained by plating of pavement.
- The paved surface shall be free of stored equipment, excavated material, etc. during specified hours.
- Protection and temporary crossings shall be provided for pedestrians at all crossings.
- Protection and temporary driveway access to residents and businesses shall be provided and maintained as directed by the Engineer.
- The Contractor shall notify local businesses a minimum of 48 hours prior to the implementation of any lane closures, weekend closures and major traffic shifts.
- The Contractor shall notify the Engineer, the state and the local police and fire department patrolling the area three (3) business days prior to making any lane closures or traffic switches.
- The Contractor must coordinate his operations with contractors performing work on other projects within or adjacent to the construction influence area.
- Steel plates, 3/4 inch thick, of sufficient size, shall be furnished and installed by the contractor to cover paving cuts and to provide crossings over trenches. No separate compensation will be made to furnish, install, maintain and remove these Steel Plates when no longer needed. It is the Contractor responsibility to pay for this item.
- Plates shall be bedded in Cold Patch so as to avoid rocking and the noise resulting there from, and shall be firmly anchored by spiking into the existing pavement.
- Approved HMA material, shall be used at the ends of the plates to eliminate bumps in traffic lanes. It is the Contractor's responsibility to pay for the approved HMA material.
- The spikes shall have a minimum length of 3 inches and shall be driven not closer than 12 inches from the edge of a trench up to 3 feet deep or 2 feet from the edge of a trench greater than 3 feet deep.

DET: MCS
JJR: BPC

Revised: 04-14-2010
Revised: 04-25-2011

- For trenches wider than 4 feet, the Contractor shall submit a method of bridging to the Engineer for approval. All bridging shall be of a design that will satisfactorily carry HS-20 truck loading across the opening smoothly, safely, and without undue noise.

SIGNING AND TRAFFIC CONTROL

The Contractor shall furnish and install all signing necessary for the maintenance of traffic. Traffic control devices shall conform to the Michigan Manual of Uniform Traffic Control Devices, 2011 Edition, Part VI, Construction and Maintenance; the Michigan Department of Transportation Maintaining Traffic Safety Typical Standards: M0020a, M0040a, M0140a, M0240a, PMC22e, WZD-100-A and WZD-125-E; and/or the City of Detroit, Department of Public Works Standards on Maintenance and Utility Signing as applicable. The listed Traffic Typical Standards are most frequently used and it may be necessary to utilize other Traffic Typical as applicable.

Distances between sign locations will vary depending on the lengths of the City blocks in advance of the job site. Other traffic signing and barricading requirements for this project are contained in the proposal.

The Contractor may relocate signs and other portable barricades only after coordinating with representatives of the Traffic Engineering Division of the Department of Public Works.

The Contractor may purchase signs from the City of Detroit Sign Shop if desired or may obtain signs from other sources. If signs are requested from the City of Detroit, a letter of request must first be sent to the Operations Division of the City of Detroit.

CONSTRUCTION INFLUENCE AREA (CIA)

The CIA shall include the area within the right-of-way of the street or streets listed in the contract title and/or the cross streets within the limits of the construction staging.

STREET	FROM	TO
Alter Road	Chandler Park	E. Jefferson
Cadieux	Chandler Park	Morang
Mack	I-75	Riopelle
E. 7 Mile	I-75	Conant
Harper	Cadieux	I-94 Cross Over

The Contractor shall coordinate his operations with Contractors performing work on other projects within or adjacent to the Construction Influence Area (CIA).

DET: MCS
JJR: BPC

Revised: 04-14-2010
Revised: 04-25-2011

TIME RESTRICTIONS

Maintaining traffic requirements and hourly restrictions are subject to change by the engineer.

No work shall be performed or lane closures allowed during the Memorial Day, July 4th, or Labor Day holiday periods, as defined by the Engineer. The contractor shall coordinate their work schedule around special events that take place in local communities in accordance with the Engineer. The contractor shall be responsible to contact the Engineer to acquire specific dates and locations for these events.

Other special events that may affect lane closures, as defined by the Engineer, are as follows:

- Downtown Hoe Down
- Freedom Festival
- Annual Detroit Electronic Music Festival
- Chrysler Jeep Detroit APBA Cup
- African World Festival
- Ford Detroit International Jazz Festival
- Ford Field Special Events and Home Games
- Comerica Park Special Events and Homes Games
- JLA Special Events and Home Games
- Free Press Marathon

Work shall be suspended by the Engineer at any time traffic is being unduly hampered or delayed. In general, traffic is expected to be unduly hampered from 7:00 a.m. to 9:00 a.m. and from 4:00 p.m. to 6:00 p.m. weekdays. These hours may be adjusted by the Engineer.

TRUCK HAUL ROUTES

Truck haul routes selected by the Contractor must be submitted to the Detroit Department of Public Works for approval prior to the start of construction and are subject to regulations of the department.

BARRICADES

Plastic Drums, High Intensity, and Barricade, Type III, High Intensity, Double Sided, Lighted necessary for traffic control and public safety shall be furnished and erected by the Contractor.

DET: MCS
JJR: BPC

Revised: 04-14-2010
Revised: 04-25-2011

WARNING LIGHTS

Battery operated warning flashers shall be used on all barricades in accordance with Michigan Department of Transportation Michigan Manual of Uniform Traffic Control Devices, 2011 Edition and any recent changes and to special provision regarding battery operated warning lights

STAGE CONSTRUCTION

The traffic control required by this Special Provision for work on various streets in the contract and adjacent roadways is based on the MMUTCD. At the discretion of the Engineer, the Contractor may be requested to conduct construction activities in certain segments of the project at such times that coordinates with adjacent property owner uses and activities. The Contractor shall submit for review and approval by the Engineer a sequence of operation/staging plans to complete the work by the specified completion date. The adjustments or changes in the staging of construction to accommodate property owners shall not be paid for separately and shall be included in the overall project cost.

- **Traffic shall be maintained using attached traffic control typical.**
- **Pedestrians Traffic shall be maintained using Michigan Manual of Uniform Traffic Control Devices details shown in figures 6H-28 & 6H-29.**

CLEANING ADJACENT STREETS AND SIDEWALKS

Dirt, mud, construction materials or other debris deposited on public sidewalks or streets as the result of spilling, tracking by the wheels of trucks or construction equipment or by other actions of the Contractor, his employees or subcontractors shall be immediately removed by the Contractor. Failure to do so is a violation of City Ordinances punishable by fines and/or imprisonment.

Failure to comply with all stipulations of the above traffic specifications will be cause for complete shutdown of the project.

In the event of an emergency, these restrictions are subject to change if traffic conditions indicate such a necessity. Traffic specifications are to be with the work crews at all times.

Temporary "No Parking" signs shall be placed in all parking areas when necessary to prohibit parking during construction activities. The "No Parking" signs shall be placed in all parking areas at least 24 hours and not more than 48 hours prior to construction activities.

DET: MCS
JJR: BPC

Revised: 04-14-2010
Revised: 04-25-2011

METHOD OF MEASUREMENT AND BASIS OF PAYMENT

Maintaining Traffic will be measured and paid for at the contract unit price for the contract pay items.
Payment for providing and maintaining driveway access and pedestrians crossing, temporary No Parking Signs, ¾ inch steel plates, plates bedding, spikes will not be paid separately. Payment for these items of work not paid for separately and/or other items are included in the total cost of the project.

Any equipment required for nighttime operations shall be included in the cost of the work items being placed.

Contract Item (Pay Item)	Pay Unit
Lighted Arrow, Type C, Furn	Each
Lighted Arrow, Type C, Oper	Each
Plastic Drum, High Intensity, Furn	Each
Plastic Drum, High Intensity, Oper	Each
Minor Traf Devices	Lump Sum
Sign Type B, Temp, Prismatic, Furn	Square Foot
Sign Type B, Temp, Prismatic, Oper	Square Foot
Pavt Mrkg, Longit, 6 inches or Less Width, Rem	Foot
Traffic Regulator Control	Lump Sum

MINIMUM MERGING TAPER LENGTH "L" (FEET)

OFFSET FEET	POSTED SPEED LIMIT, MPH (PRIOR TO WORK AREA)									
	25	30	35	40	45	50	55	60	65	70
1	10	15	20	27	45	50	55	60	65	70
2	21	30	41	53	90	100	110	120	130	140
3	31	45	61	80	135	150	165	180	195	210
4	42	60	82	107	180	200	220	240	260	280
5	52	75	102	133	225	250	275	300	325	350
6	63	90	123	160	270	300	330	360	390	420
7	73	105	143	187	315	350	385	420	455	490
8	83	120	163	213	360	400	440	480	520	560
9	94	135	184	240	405	450	495	540	585	630
10	104	150	204	267	450	500	550	600	650	700
11	115	165	225	293	495	550	605	660	715	770
12	125	180	245	320	540	600	660	720	780	840
13	135	195	266	347	585	650	715	780	845	910
14	146	210	286	374	630	700	770	840	910	980
15	157	225	307	400	675	750	825	900	975	1050

TAPER LENGTH "L" IN FEET

THE FORMULAS FOR THE MINIMUM LENGTH OF A MERGING TAPER IN DERIVING THE "L" VALUES SHOWN IN THE ABOVE TABLES ARE AS FOLLOWS:

$$"L" = \frac{W \times S^2}{60}$$ WHERE POSTED SPEED PRIOR TO THE WORK AREA IS 40 MPH OR LESS

"L" = S x W WHERE POSTED SPEED PRIOR TO THE WORK AREA IS 45 MPH OR GREATER

L = MINIMUM LENGTH OF MERGING TAPER
S = POSTED SPEED LIMIT IN MPH PRIOR TO WORK AREA
W = WIDTH OF OFFSET

TYPES OF TAPERS	TAPER LENGTH
UPSTREAM TAPERS	
MERGING TAPER	L - MINIMUM
SHIFTING TAPER	1/2 L - MINIMUM
SHOULDER TAPER	1/3 L - MINIMUM
TWO-WAY TRAFFIC TAPER	100 ' - MAXIMUM
DOWNSTREAM TAPERS (USE IS OPTIONAL)	100 ' - MINIMUM (PER LANE)

MDOT Michigan Department of Transportation
TRAFFIC AND SAFETY
MAINTAINING TRAFFIC TYPICAL

TABLES FOR "L", "D" AND "B" VALUES

DRAWN BY: CON:AE:djf
CHECKED BY: BMM
JUNE 2006
PLAN DATE:
M0020a
SHEET 1 OF 2
FILE: K:/OON/TSR/STOS/ENGLISH/MNTTRF/M0020a.dgn REV. 08/21/2006

[redacted]

DISTANCE BETWEEN TRAFFIC CONTROL DEVICES "D" AND LENGTH OF LONGITUDINAL BUFFER SPACE ON "WHERE WORKERS PRESENT" SEQUENCES

"D" DISTANCES	POSTED SPEED LIMIT, MPH (PRIOR TO WORK AREA)									
	25	30	35	40	45	50	55	60	65	70
D (FEET)	250	300	350	400	450	500	550	600	650	700

GUIDELINES FOR LENGTH OF LONGITUDINAL BUFFER SPACE "B"

SPEED* MPH	LENGTH FEET
20	33
25	50
30	83
35	132
40	181
45	230
50	279
55	329
60	411
65	476
70	542

* POSTED SPEED, OFF PEAK 85TH PERCENTILE SPEED PRIOR TO WORK STARTING, OR THE ANTICIPATED OPERATING SPEED

1 BASED UPON AMERICAN ASSOCIATION OF STATE HIGHWAY AND TRANSPORTATION OFFICIALS (AASHTO) BRAKING DISTANCE PORTION OF STOPPING SIGHT DISTANCE FOR WET AND LEVEL PAVEMENTS (A POLICY ON GEOMETRIC DESIGN OF HIGHWAY AND STREETS), AASHTO. THIS AASHTO DOCUMENT ALSO RECOMMENDS ADJUSTMENTS FOR THE EFFECT OF GRADE ON STOPPING AND VARIATION FOR TRUCKS.

[redacted]

MDOT Michigan Department of Transportation TRAFFIC AND SAFETY MAINTAINING TRAFFIC TYPICAL	TABLES FOR "L", "D" AND "B" VALUES		
DRAWN BY: CON:AE:djf CHECKED BY: BWW	JUNE 2006 PLAN DATE:	M0020a	SHEET 2 OF 2
FILE: K:/DGN/TSR/STDS/ENGLISH/MNTTRF/M0020a.dgn	REV. 08/21/2006		

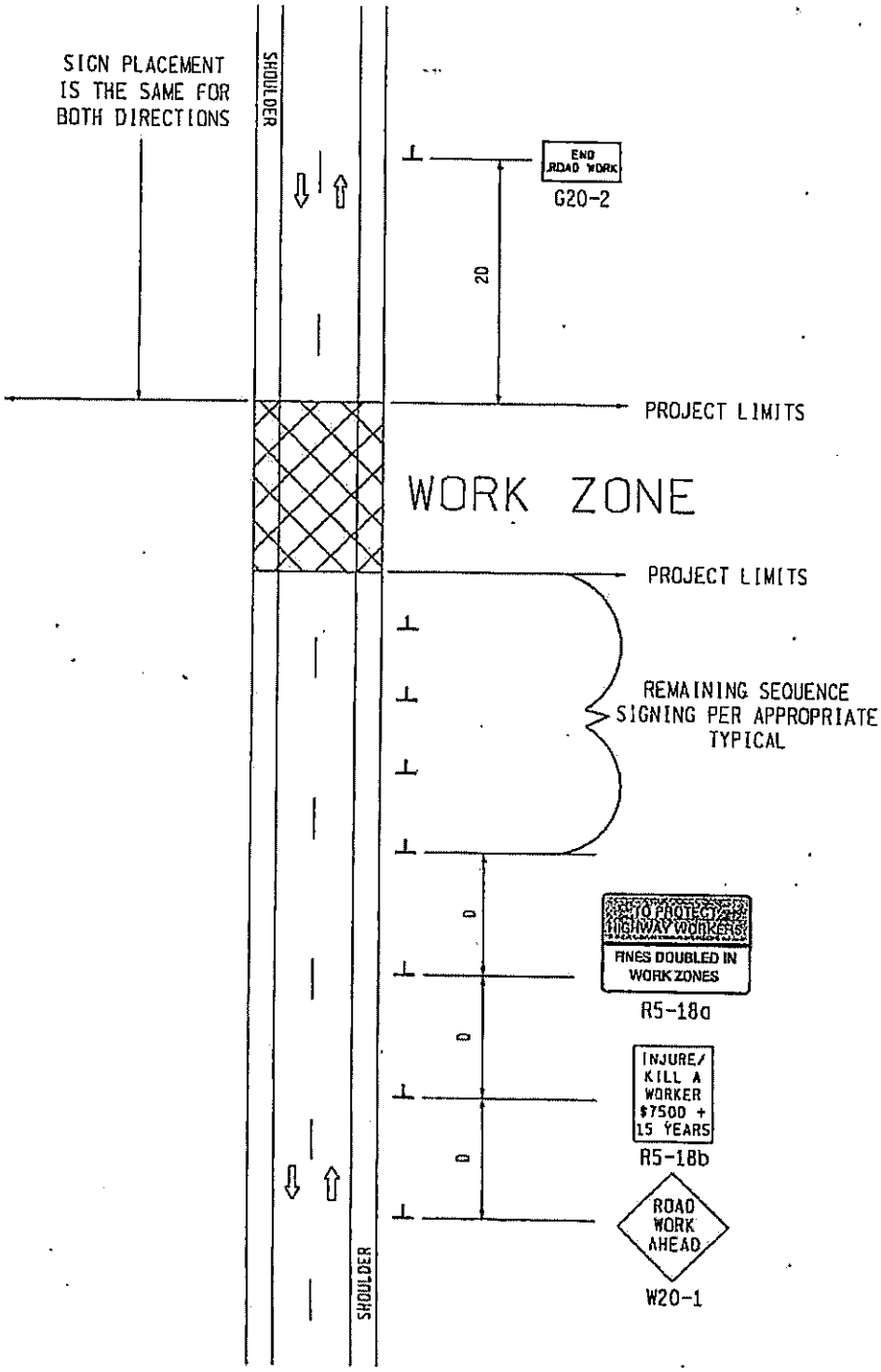

SIGN = 68 ft2 - TYPE B
FOR ONE DIRECTION OF TRAFFIC
W20-1 QUANTITY INCLUDED
WITH APPROPRIATE TYPICAL
FOR SEQUENCE SIGNING

NOT TO SCALE

MDOT Michigan Department of Transportation

TRAFFIC AND SAFETY

MAINTAINING TRAFFIC TYPICAL

TYPICAL ADVANCE SIGNING TREATMENT FOR LONG, INTERMEDIATE AND SHORT TERM STATIONARY WORK ZONE OPERATIONS OF LESS THAN TWO MILES IN LENGTH WHERE TRAFFIC CONTROL DEVICES MAY REMAIN AT END OF WORK DAY ON AN UNDIVIDED TWO-WAY ROADWAY

DRAWN BY: CDN:AE:djf	JUNE 2006	M0040a	SHEET 1 OF 2
CHECKED BY: BNW	PLAN DATE:		

FILE: PW RD/TS/Typicals/Signs/NT NON FWY/M0040a.dgn REV. 08/15/2007

NOTES

30. THE APPROPRIATE ADVANCE SIGNING SEQUENCE(S), (M0030a THROUGH M0080a) SHALL BE USED ON ALL PROJECTS.

32. THESE SIGNS SHALL BE LEFT IN PLACE AT THEIR PRESCRIBED LOCATIONS FOR THE DURATION OF THE PROJECT AND UNTIL ALL TEMPORARY TRAFFIC CONTROL HAS BEEN REMOVED.

35. THESE SIGNS ARE INTENDED TO BE USED WITHIN THE LIMITS OF THE TEMPORARY SEQUENCE SIGNING AS IS SHOWN ON 1 OF 2. THESE SIGNS ARE NOT TO BE INTERMINGLED WITH ANY OTHER TEMPORARY SEQUENCE SIGNING EXCEPT AS SHOWN.

SIGN SIZES

G20-2	-	48" x 24"
R5-18a	-	96" x 60"
R5-18b	-	48" x 60"
W20-1	-	48" x 48"

NOT TO SCALE

MDOT Michigan Department of Transportation TRAFFIC AND SAFETY MAINTAINING TRAFFIC TYPICAL	TYPICAL ADVANCE SIGNING TREATMENT FOR LONG, INTERMEDIATE AND SHORT TERM STATIONARY WORK ZONE OPERATIONS OF LESS THAN TWO MILES IN LENGTH WHERE TRAFFIC CONTROL DEVICES MAY REMAIN AT END OF WORK DAY ON AN UNDIVIDED TWO-WAY ROADWAY		
DRAWN BY: CON:AE:djF	JUNE 2006	M0040a	SHEET 2 OF 2
CHECKED BY: BMM	PLAN DATE:		
FILE: PW RD/TS/Typicals/Signs/NT NON FWY/M0040a.dgn REV. 08/15/2007			

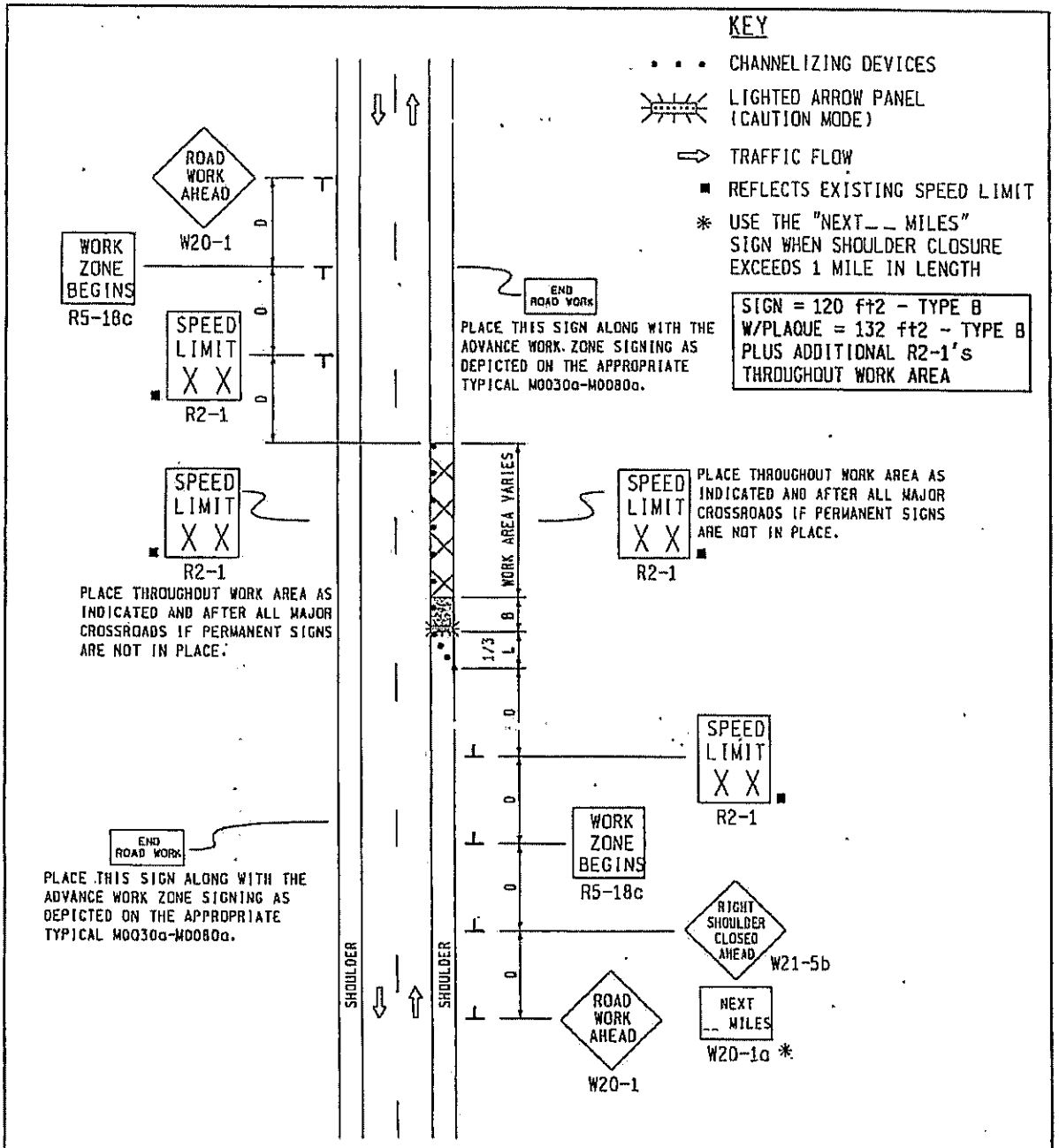

NOT TO SCALE

MDOT Michigan Department of Transportation TRAFFIC AND SAFETY MAINTAINING TRAFFIC TYPICAL	TYPICAL TEMPORARY TRAFFIC CONTROL FOR A SHOULDER CLOSURE ON A TWO LANE TWO-WAY ROADWAY NO SPEED REDUCTION		
DRAWN BY: CON:AE:djf CHECKED BY: BWN	JUNE 2006 PLAN DATE:	M0110a	SHEET 1 OF 2
FILE: PW RD/TS/Typicals/Signs/MT NON FWY/M0110a.dgn REV. 8/16/2007			

NOTES

1. D = DISTANCE BETWEEN TRAFFIC CONTROL DEVICES
   1/3 L = MINIMUM LENGTH OF TAPER
   B = LENGTH OF LONGITUDINAL BUFFER
   SEE M0020a FOR "D," "L," AND "B" VALUES

2. ALL NON-APPLICABLE SIGNING WITHIN THE CIA SHALL BE MODIFIED TO FIT CONDITIONS, COVERED OR REMOVED.

3. DISTANCES BETWEEN SIGNS, THE VALUES FOR WHICH ARE SHOWN IN TABLE D, ARE APPROXIMATE AND MAY NEED ADJUSTING AS DIRECTED BY THE ENGINEER.

3A. THE "WORK ZONE BEGINS" (R5-18c) SIGN SHALL BE USED ONLY IN THE INITIAL SIGNING SEQUENCE IN THE WORK ZONE. SUBSEQUENT SEQUENCES IN THE SAME WORK ZONE SHALL OMIT THIS SIGN AND THE QUANTITIES SHALL BE ADJUSTED APPROPRIATELY.

4E. THE MAXIMUM RECOMMENDED DISTANCE(S) BETWEEN CHANNELIZING DEVICES SHOULD BE EQUAL IN FEET TO THE POSTED SPEED IN MILES PER HOUR ON TAPER(S) AND TWICE THE POSTED SPEED IN THE PARALLEL AREA(S).

5. FOR OVERNIGHT CLOSURES, CHANNELIZING DEVICES SHALL BE LIGHTED PLASTIC DRUMS.

6. WHEN CALLED FOR IN THE FHWA ACCEPTANCE LETTER FOR THE SIGN SYSTEM SELECTED, THE TYPE A WARNING FLASHER, SHOWN ON THE WARNING SIGNS, SHALL BE POSITIONED ON THE SIDE OF THE SIGN NEAREST THE ROADWAY.

7. ALL TEMPORARY SIGNS, TYPE III BARRICADES, THEIR SUPPORT SYSTEMS AND LIGHTING REQUIREMENTS SHALL MEET NCHRP 350 CRASHWORTHLY REQUIREMENTS STIPULATED IN THE 2005 EDITION OF THE MICHIGAN MANUAL ON UNIFORM TRAFFIC CONTROL DEVICES, THE CURRENT EDITION OF THE STANDARD SPECIFICATIONS FOR CONSTRUCTION, THE STANDARD PLANS AND APPLICABLE SPECIAL PROVISIONS. ONLY DESIGNS AND MATERIALS APPROVED BY MDOT WILL BE ALLOWED.

8. WHEN BUFFER AREAS ARE ESTABLISHED, THERE SHALL BE NO EQUIPMENT OR MATERIALS STORED OR WORK CONDUCTED IN THE BUFFER AREA.

29A. THE TYPE OF REFLECTIVE SHEETING USED FOR THE W20-1a PLAQUE SHALL BE THE SAME AS THE TYPE USED FOR THE PARENT SIGN.

SIGN SIZES

DIAMOND WARNING	- 48" x 48"
W20-1a PLAQUE	- 48" x 36"
R2-1 REGULATORY	- 48" x 60"
R5-18c REGULATORY	- 48" x 48"

NOT TO SCALE

MDOT Michigan Department of Transportation TRAFFIC AND SAFETY MAINTAINING TRAFFIC TYPICAL	TYPICAL TEMPORARY TRAFFIC CONTROL FOR A SHOULDER CLOSURE ON A TWO LANE TWO-WAY ROADWAY NO SPEED REDUCTION		
DRAWN BY: CON:AE:djf CHECKED BY: BMM	JUNE 2006 PLAN DATE:	M0110a	SHEET 2 OF 2
FILE: PW RD/TS/Typicals/Signs/MT NON FWY/M0110a.dgn REV. 8/16/2007			

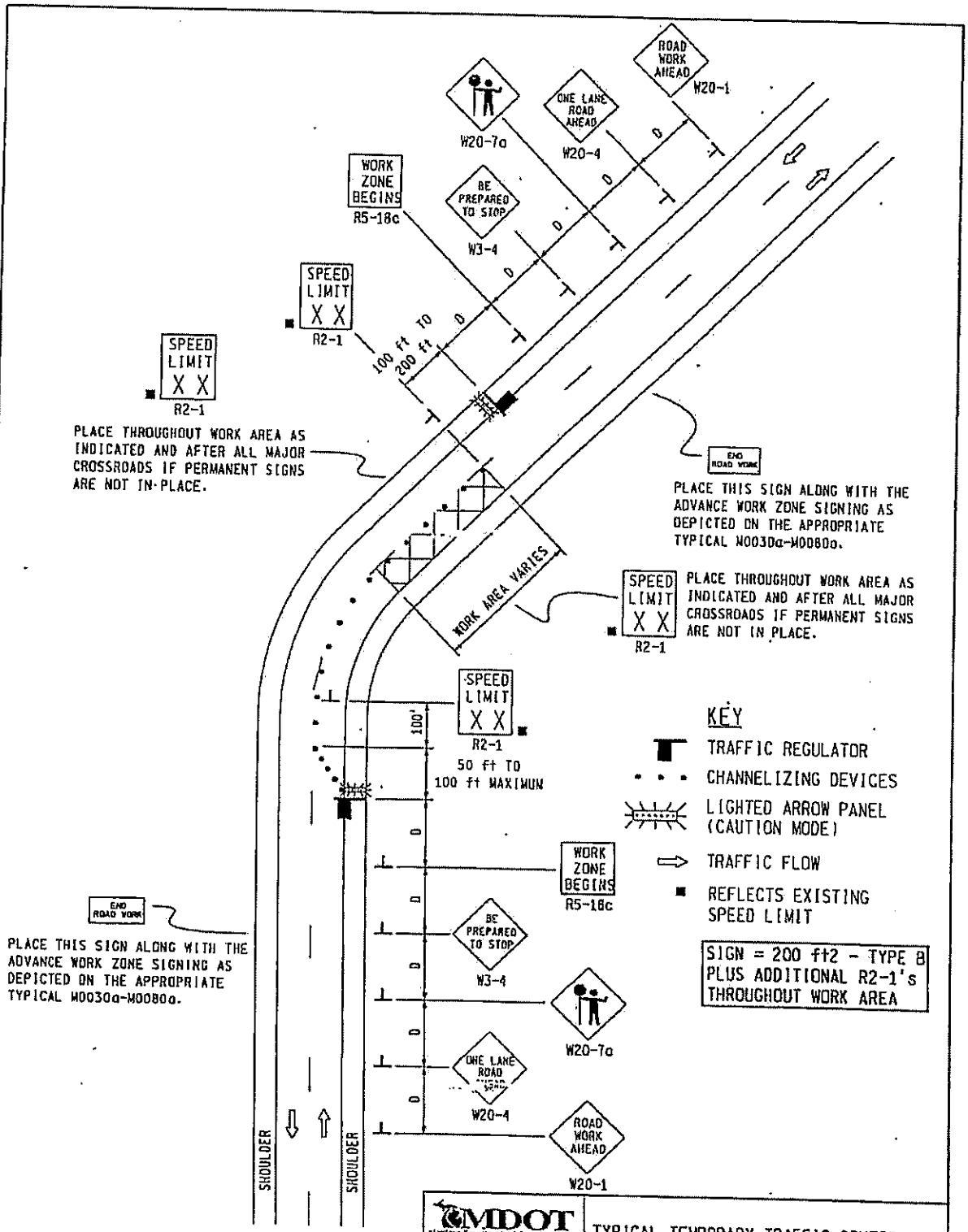

MDOT Michigan Department of Transportation

TRAFFIC AND SAFETY

MAINTAINING TRAFFIC TYPICAL

TYPICAL TEMPORARY TRAFFIC CONTROL FOR A TWO-LANE TWO-WAY ROADWAY WHERE ONE LANE IS CLOSED UTILIZING TRAFFIC REGULATORS, NO SPEED REDUCTION

DRAWN BY: CON:AE:djf	JUNE 2006	M0140a	SHEET 1 OF 2
CHECKED BY: BMM	PLAN DATE:		

FILE: PW R0/TS/Typicals/Signs/MT NON FWY/M0140a.dgn REV. 08/17/2007

NOTES

1H. D = DISTANCE BETWEEN TRAFFIC CONTROL DEVICES AND LENGTH OF LONGITUDINAL BUFFERS SEE M0020a FOR "D" VALUES.

2. ALL NON-APPLICABLE SIGNING WITHIN THE CIA SHALL BE MODIFIED TO FIT CONDITIONS, COVERED OR REMOVED.

3. DISTANCES BETWEEN SIGNS, THE VALUES FOR WHICH ARE SHOWN IN TABLE D, ARE APPROXIMATE AND MAY NEED ADJUSTING AS DIRECTED BY THE ENGINEER.

3A. THE "WORK ZONE BEGINS" (R5-18c) SIGN SHALL BE USED ONLY IN THE INITIAL SIGNING SEQUENCE IN THE WORK ZONE. SUBSEQUENT SEQUENCES IN THE SAME WORK ZONE SHALL OMIT THIS SIGN AND THE QUANTITIES SHALL BE ADJUSTED APPROPRIATELY.

4A. THE MAXIMUM RECOMMENDED DISTANCE(S) BETWEEN CHANNELIZING DEVICES IN THE TAPER AREA(S) SHOULD BE 15 FEET AND SHOULD BE EQUAL IN FEET TO TWICE THE POSTED SPEED IN MILES PER HOUR IN THE PARALLEL AREA(S).

5. FOR OVERNIGHT CLOSURES, CHANNELIZING DEVICES SHALL BE LIGHTED PLASTIC DRUMS.

6. WHEN CALLED FOR IN THE FHWA ACCEPTANCE LETTER FOR THE SIGN SYSTEM SELECTED, THE TYPE A WARNING FLASHER, SHOWN ON THE WARNING SIGNS, SHALL BE POSITIONED ON THE SIDE OF THE SIGN NEAREST THE ROADWAY.

7. ALL TEMPORARY SIGNS, TYPE III BARRICADES, THEIR SUPPORT SYSTEMS AND LIGHTING REQUIREMENTS SHALL MEET NCHRP 350 CRASHWORTHLY REQUIREMENTS STIPULATED IN THE 2005 EDITION OF THE MICHIGAN MANUAL ON UNIFORM TRAFFIC CONTROL DEVICES, THE CURRENT EDITION OF THE STANDARD SPECIFICATIONS FOR CONSTRUCTION, THE STANDARD PLANS AND APPLICABLE SPECIAL PROVISIONS. ONLY DESIGNS AND MATERIALS APPROVED BY MDOT WILL BE ALLOWED.

9. ALL TRAFFIC REGULATORS SHALL BE PROPERLY TRAINED AND SUPERVISED.

9A. IN ANY OPERATION INVOLVING MORE THAN ONE TRAFFIC REGULATOR, ONE PERSON SHOULD BE DESIGNATED AS HEAD TRAFFIC REGULATOR.

10. ALL TRAFFIC REGULATORS' CONDUCT, THEIR EQUIPMENT, AND TRAFFIC REGULATING PROCEDURES SHALL CONFORM TO THE CURRENT EDITION OF THE MICHIGAN MANUAL OF UNIFORM TRAFFIC CONTROL DEVICES (MMUTCD) AND THE CURRENT EDITION OF THE MDOT HANDBOOK ENTITLED "TRAFFIC REGULATORS INSTRUCTION MANUAL."

11. WHEN TRAFFIC REGULATING IS ALLOWED DURING THE HOURS OF DARKNESS, APPROPRIATE LIGHTING SHALL BE PROVIDED TO SUFFICIENTLY ILLUMINATE THE TRAFFIC REGULATOR'S STATIONS.

12E. THE MAXIMUM DISTANCE BETWEEN THE TRAFFIC REGULATORS SHALL BE NO MORE THAN 2 MILES IN LENGTH UNLESS RESTRICTED FURTHER IN THE SPECIAL PROVISIONS FOR MAINTAINING TRAFFIC. ALL SEQUENCES OF MORE THAN 2 MILES IN LENGTH WILL REQUIRE WRITTEN PERMISSION FROM THE ENGINEER BEFORE PROCEEDING.

13. WHEN INTERSECTING ROADS OR SIGNIFICANT TRAFFIC GENERATORS (SHOPPING CENTERS, MOBILE HOME PARKS, ETC.) OCCUR WITHIN THE ONE-LANE TWO-WAY OPERATION, INTERMEDIATE TRAFFIC REGULATORS AND APPROPRIATE SIGNING SHALL BE PLACED AT THESE LOCATIONS.

14. ADDITIONAL SIGNING AND/OR ELONGATED SIGNING SEQUENCES SHOULD BE USED WHEN TRAFFIC VOLUMES ARE SIGNIFICANT ENOUGH TO CREATE BACKUPS BEYOND THE W3-4 SIGNS.

15. THE HAND HELD (PADDLE) SIGNS REQUIRED BY THE MMUTCD TO CONTROL TRAFFIC WILL BE PAID FOR AS PART OF FLAG CONTROL.

28E. THE TRAFFIC REGULATORS SHOULD BE POSITIONED AT OR NEAR THE SIDE OF THE ROAD SO THAT THEY ARE SEEN CLEARLY AT A MINIMUM DISTANCE OF 500 FEET. THIS MAY REQUIRE EXTENDING THE BEGINNING OF THE LANE CLOSURE TO OVERCOME VIEWING PROBLEMS CAUSED BY HILLS AND CURVES.

SIGN SIZES

DIAMOND WARNING - 48" x 48"
R2-1 REGULATORY - 48" x 60"
R5-18c REGULATORY - 48" x 48"

NOT TO SCALE

MDOT Michigan Department of Transportation TRAFFIC AND SAFETY MAINTAINING TRAFFIC TYPICAL	TYPICAL TEMPORARY TRAFFIC CONTROL FOR A TWO-LANE TWO-WAY ROADWAY WHERE ONE LANE IS CLOSED UTILIZING TRAFFIC REGULATORS, NO SPEED REDUCTION		
DRAWN BY: CON:AE:djf	JUNE 2006	M0140a	SHEET 2 OF 2
CHECKED BY: BMM	PLAN DATE:		
FILE: PW RD/TS/Typicals/Signs/NT NON FWY/M0140a.dgn REV. 08/17/2007			

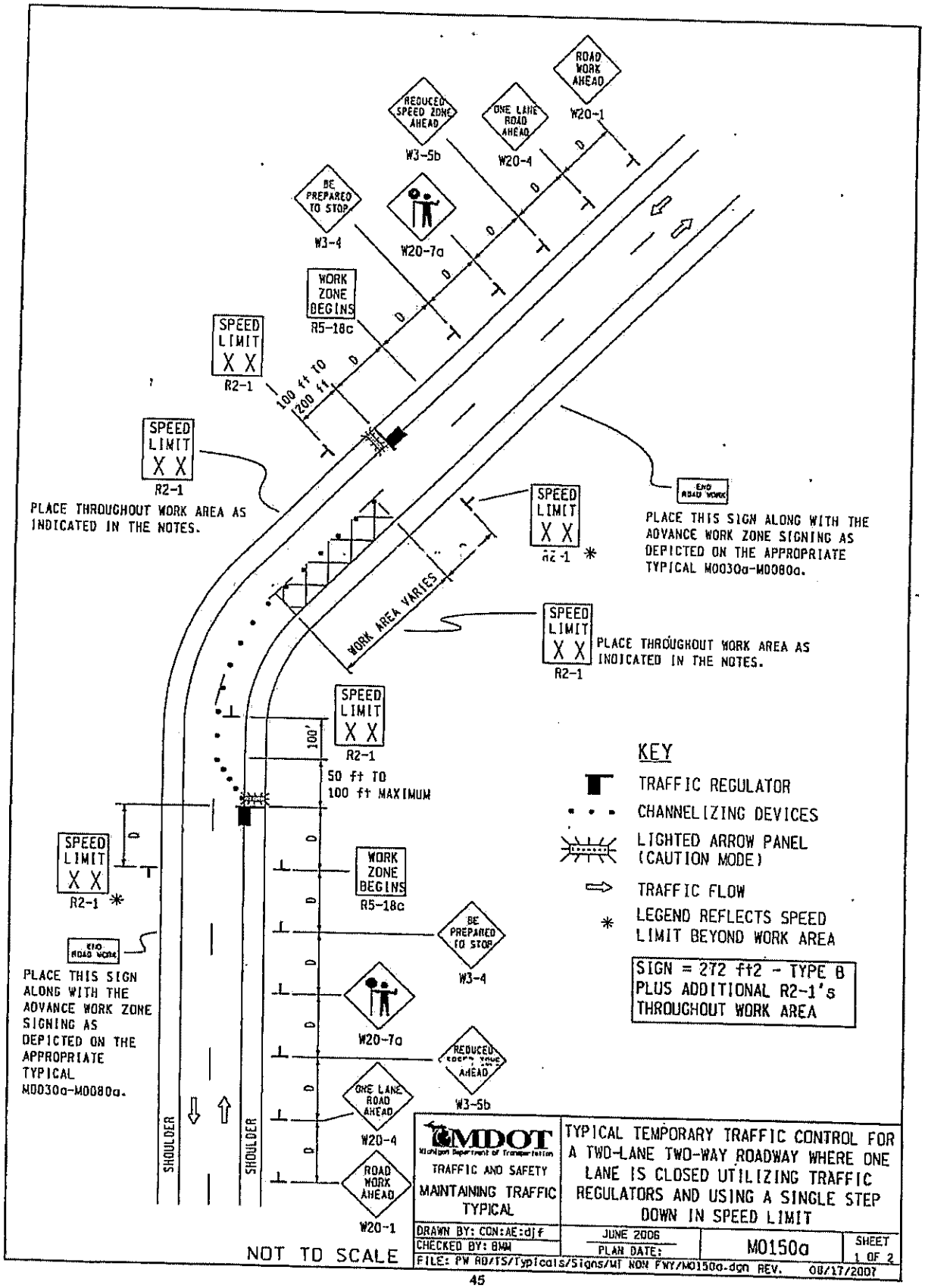
ROAD WORK AHEAD
W20-1
REDUCED SPEED ZONE AHEAD
W3-5b
ONE LANE ROAD AHEAD
W20-4
BE PREPARED TO STOP
W3-4
W20-7a
WORK ZONE BEGINS
R5-18c
SPEED LIMIT X X
R2-1
100 ft TO 200 ft
D
SPEED LIMIT X X
R2-1
PLACE THROUGHOUT WORK AREA AS INDICATED IN THE NOTES.
END ROAD WORK
PLACE THIS SIGN ALONG WITH THE ADVANCE WORK ZONE SIGNING AS DEPICTED ON THE APPROPRIATE TYPICAL M0030a-M0080a.
SPEED LIMIT X X
R2-1 *
WORK AREA VARIES
SPEED LIMIT X X
R2-1
PLACE THROUGHOUT WORK AREA AS INDICATED IN THE NOTES.
SPEED LIMIT X X
R2-1
100'
50 ft TO 100 ft MAXIMUM
SPEED LIMIT X X
R2-1 *
WORK ZONE BEGINS
R5-18c
BE PREPARED TO STOP
W3-4
END ROAD WORK
PLACE THIS SIGN ALONG WITH THE ADVANCE WORK ZONE SIGNING AS DEPICTED ON THE APPROPRIATE TYPICAL M0030a-M0080a.
W20-7a
REDUCED SPEED ZONE AHEAD
W3-5b
ONE LANE ROAD AHEAD
W20-4
ROAD WORK AHEAD
W20-1
SHOULDER
SHOULDER
KEY
TRAFFIC REGULATOR
CHANNELIZING DEVICES
LIGHTED ARROW PANEL (CAUTION MODE)
TRAFFIC FLOW
* LEGEND REFLECTS SPEED LIMIT BEYOND WORK AREA
SIGN = 272 ft2 - TYPE B PLUS ADDITIONAL R2-1's THROUGHOUT WORK AREA
MDOT
Michigan Department of Transportation
TRAFFIC AND SAFETY
MAINTAINING TRAFFIC TYPICAL
TYPICAL TEMPORARY TRAFFIC CONTROL FOR A TWO-LANE TWO-WAY ROADWAY WHERE ONE LANE IS CLOSED UTILIZING TRAFFIC REGULATORS AND USING A SINGLE STEP DOWN IN SPEED LIMIT
DRAWN BY: CON:AE:djf
CHECKED BY: BMW
JUNE 2006
PLAN DATE:
M0150a
SHEET 1 OF 2
FILE: PW R0/TS/Typicals/Signs/MT NON FWY/M0150a.dgn REV. 08/17/2007
NOT TO SCALE

NOTES

1H. D = DISTANCE BETWEEN TRAFFIC CONTROL DEVICES AND LENGTH OF LONGITUDINAL BUFFERS SEE M0020a FOR "D" VALUES.

2. ALL NON-APPLICABLE SIGNING WITHIN THE CIA SHALL BE MODIFIED TO FIT CONDITIONS, COVERED OR REMOVED.

3. DISTANCES BETWEEN SIGNS, THE VALUES FOR WHICH ARE SHOWN IN TABLE D, ARE APPROXIMATE AND MAY NEED ADJUSTING AS DIRECTED BY THE ENGINEER.

3A. THE "WORK ZONE BEGINS" (R5-18c) SIGN SHALL BE USED ONLY IN THE INITIAL SIGNING SEQUENCE IN THE WORK ZONE. SUBSEQUENT SEQUENCES IN THE SAME WORK ZONE SHALL OMIT THIS SIGN AND THE QUANTITIES SHALL BE ADJUSTED APPROPRIATELY.

4A. THE MAXIMUM RECOMMENDED DISTANCE(S) BETWEEN CHANNELIZING DEVICES IN THE TAPER AREA(S) SHOULD BE 15 FEET AND SHOULD BE EQUAL IN FEET TO TWICE THE POSTED SPEED IN MILES PER HOUR IN THE PARALLEL AREA(S).

5. FOR OVERNIGHT CLOSURES, CHANNELIZING DEVICES SHALL BE LIGHTED PLASTIC DRUMS.

6. WHEN CALLED FOR IN THE FHWA ACCEPTANCE LETTER FOR THE SIGN SYSTEM SELECTED, THE TYPE A WARNING FLASHER, SHOWN ON THE WARNING SIGNS, SHALL BE POSITIONED ON THE SIDE OF THE SIGN NEAREST THE ROADWAY.

7. ALL TEMPORARY SIGNS, TYPE III BARRICADES, THEIR SUPPORT SYSTEMS AND LIGHTING REQUIREMENTS SHALL MEET NCHRP 350 CRASHWORTHLY REQUIREMENTS STIPULATED IN THE 2005 EDITION OF THE MICHIGAN MANUAL ON UNIFORM TRAFFIC CONTROL DEVICES, THE CURRENT EDITION OF THE STANDARD SPECIFICATIONS FOR CONSTRUCTION, THE STANDARD PLANS AND APPLICABLE SPECIAL PROVISIONS. ONLY DESIGNS AND MATERIALS APPROVED BY MDOT WILL BE ALLOWED.

9. ALL TRAFFIC REGULATORS SHALL BE PROPERLY TRAINED AND SUPERVISED.

9A. IN ANY OPERATION INVOLVING MORE THAN ONE TRAFFIC REGULATOR, ONE PERSON SHOULD BE DESIGNATED AS HEAD TRAFFIC REGULATOR.

10. ALL TRAFFIC REGULATORS' CONDUCT, THEIR EQUIPMENT, AND TRAFFIC REGULATING PROCEDURES SHALL CONFORM TO THE CURRENT EDITION OF THE MICHIGAN MANUAL OF UNIFORM TRAFFIC CONTROL DEVICES (MMUTCD) AND THE CURRENT EDITION OF THE MDOT HANDBOOK ENTITLED "TRAFFIC REGULATORS INSTRUCTION MANUAL."

11. WHEN TRAFFIC REGULATING IS ALLOWED DURING THE HOURS OF DARKNESS, APPROPRIATE LIGHTING SHALL BE PROVIDED TO SUFFICIENTLY ILLUMINATE THE TRAFFIC REGULATOR'S STATIONS.

12E. THE MAXIMUM DISTANCE BETWEEN THE TRAFFIC REGULATORS SHALL BE NO MORE THAN 2 MILES IN LENGTH UNLESS RESTRICTED FURTHER IN THE SPECIAL PROVISIONS FOR MAINTAINING TRAFFIC. ALL SEQUENCES OF MORE THAN 2 MILES IN LENGTH WILL REQUIRE WRITTEN PERMISSION FROM THE ENGINEER BEFORE PROCEEDING.

13. WHEN INTERSECTING ROADS OR SIGNIFICANT TRAFFIC GENERATORS (SHOPPING CENTERS, MOBILE HOME PARKS, ETC.) OCCUR WITHIN THE ONE-LANE TWO-WAY OPERATION, INTERMEDIATE TRAFFIC REGULATORS AND APPROPRIATE SIGNING SHALL BE PLACED AT THESE LOCATIONS.

14. ADDITIONAL SIGNING AND/OR ELONGATED SIGNING SEQUENCES SHOULD BE USED WHEN TRAFFIC VOLUMES ARE SIGNIFICANT ENOUGH TO CREATE BACKUPS BEYOND THE W3-4 SIGNS.

15. THE HAND HELD (PADDLE) SIGNS REQUIRED BY THE MMUTCD TO CONTROL TRAFFIC WILL BE PAID FOR AS PART OF FLAG CONTROL.

16A. ADDITIONAL SPEED LIMIT SIGNS REFLECTING THE REDUCED SPEED SHALL BE PLACED AFTER EACH MAJOR CROSSROAD THAT INTERSECTS THE WORK AREA WHERE THE REDUCED SPEED IS IN EFFECT, AND AT INTERVALS ALONG THE ROADWAY SUCH THAT NO SPEED LIMIT SIGNS REFLECTING THE REDUCED SPEED ARE MORE THAN TWO MILES APART.

16B. WHEN REDUCED SPEED LIMITS ARE UTILIZED IN THE WORK AREA, ADDITIONAL SPEED LIMIT SIGNS RETURNING TRAFFIC TO ITS NORMAL SPEED SHALL BE PLACED BEYOND THE LIMITS OF THE REDUCED SPEED AS INDICATED.

16E. WHEN EXISTING SPEED LIMITS ARE REDUCED MORE THAN 10 MPH, THE SPEED LIMIT SHALL BE STEPPED DOWN IN NO MORE THAN 10 MPH INCREMENTS.

28E. THE TRAFFIC REGULATORS SHOULD BE POSITIONED AT OR NEAR THE SIDE OF THE ROAD SO THAT THEY ARE SEEN CLEARLY AT A MINIMUM DISTANCE OF 500 FEET. THIS MAY REQUIRE EXTENDING THE BEGINNING OF THE LANE CLOSURE TO OVERCOME VIEWING PROBLEMS CAUSED BY HILLS AND CURVES.

SIGN SIZES

DIAMOND WARNING	- 48" x 48"
RECTANGULAR REGULATORY	- 48" x 60"
R5-18c REGULATORY	- 48" x 48"

NOT TO SCALE

MDOT Michigan Department of Transportation TRAFFIC AND SAFETY MAINTAINING TRAFFIC TYPICAL	TYPICAL TEMPORARY TRAFFIC CONTROL FOR A TWO-LANE TWO-WAY ROADWAY WHERE ONE LANE IS CLOSED UTILIZING TRAFFIC REGULATORS AND USING A SINGLE STEP DOWN IN SPEED LIMIT		
DRAWN BY: CON:AE:djf	JUNE 2006	M0150a	SHEET 2 OF 2
CHECKED BY: BMM	PLAN DATE:		
FILE: PW RD/TS/Typicals/Signs/MT NON FWY/M0150a.dgn REV. 08/17/2007			

SIGN MATERIAL SELECTION TABLE

SIGN SIZE	SIGN MATERIAL TYPE		
	TYPE I	TYPE II	TYPE III
≤ 36" X 36"		X	X
>36" X 36" ≤ 96" TO WIDE		X	
> 96" WIDE TO 144" WIDE	X	X	
> 144" WIDE	X		

TYPE I ALUMINUM EXTRUSION
TYPE II PLYWOOD
TYPE III ALUMINUM SHEET

ROUNDING OF CORNERS IS NOT REQUIRED FOR TYPE I OR II SIGNS.
VERTICAL JOINTS ARE NOT PERMITTED.
HORIZONTIAL JOINTS THROUGH SIGN LEGEND OR SYMBOLS ARE NOT PERMITTED.

POST SIZE REQUIREMENTS TABLE

SIGN AREA (ft^2)	POST TYPE		
	U-CHANNEL STEEL	SQUARE TUBULAR STEEL	WOOD
≤9	1 - 3 lb/ft*	1 - 2" 12 or 14 GA*	N/A
9 ≤ 20	2 - 3 lb/ft	2 - 2" 12 or 14 GA	1 - 4" X 6"*
> 20 ≤ 30	N/A	N/A	2 - 4" X 6"
> 30 ≤ 60	N/A	N/A	2 - 6" X 8"
> 60 ≤ 84	N/A	N/A	3 - 6" X 8"

*SIGNS 4 FEET AND GREATER IN WIDTH REQUIRE 2 POSTS.
SIGNS GREATER THAN 8 FEET IN WIDTH REQUIRE 2 OR 3 WOOD POSTS DEPENDING ON AREA OF SIGN.
A MAXIMUM OF 2 POSTS WITHIN A 7' PATH IS PERMITTED.

NOT TO SCALE

File:PW/Doc/RD/TAS/Typ/Dev/Sign MainTraf D/WZD-100-A Rev. 8/21/06 ECH

MDOT Michigan Department of Transportation

PREPARED BY TRAFFIC AND SAFETY SUPPORT AREA

DRAWN BY: CDN/ECH
CHECKED BY: AUG

ENGINEER OF DELIVERY

ENGINEER OF DEVELOPMENT

PENDING
FHWA APPROVAL DATE

MICHIGAN DEPARTMENT OF TRANSPORTATION
BUREAU OF HIGHWAYS-DELIVERY STANDARD PLAN FOR

GROUND DRIVEN SIGN SUPPORTS FOR TEMP SIGNS

8/2006
PLAN DATE

WZD-100-A

SHEET 1 of 11

NOTE: THE ORIGINAL SIGNED COPY IS KEPT ON FILE AT THE MICHIGAN DEPARTMENT OF TRANSPORTATION.

2 POST SIGN SUPPORT SPACING

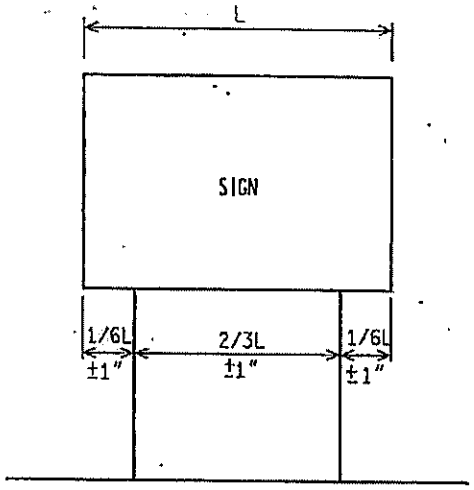

3 POST SIGN SUPPORT SPACING

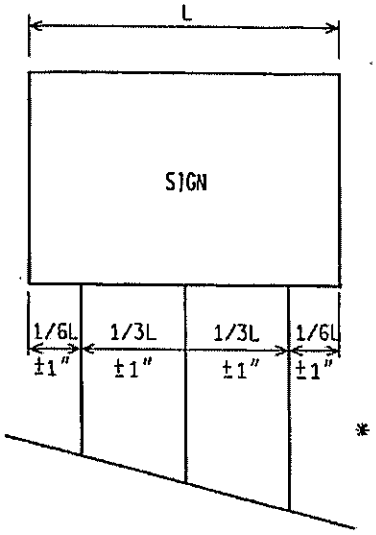

* FOR ALL 11' AND 12' LONG SIGNS ON 3 WOOD SUPPORTS, SPREAD POSTS SO AS TO HAVE A 8' MIN. TO 9' MAX. DISTANCE BETWEEN OUTSIDE POSTS.

NOT TO SCALE

MICHIGAN DEPARTMENT OF TRANSPORTATION BUREAU OF HIGHWAYS DELIVERY STANDARD PLAN	PENDING FHWA APPROVAL DATE	8/2006 PLAN DATE	WZD-100-A	SHEET 2 of11
File:PW/Doc/RD/T&S/Typ/Dev/Sign MainTraf 0/WZD-100-A Rev. 8/21/06 ECH				

NOTE: THE ORIGINAL SIGNED COPY IS KEPT ON FILE AT THE MICHIGAN DEPARTMENT OF TRANSPORTATION.

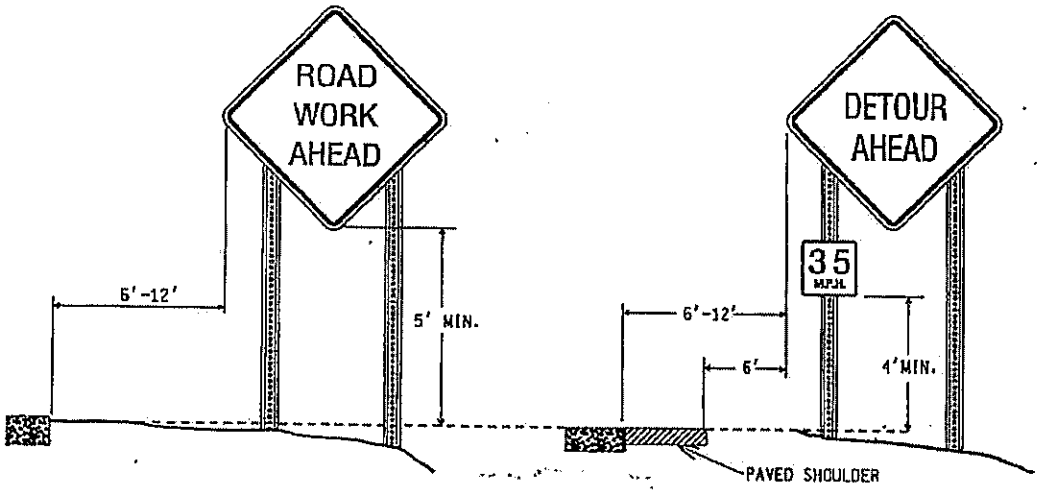

RURAL

RURAL WITH ADVISORY SPEED PLATE

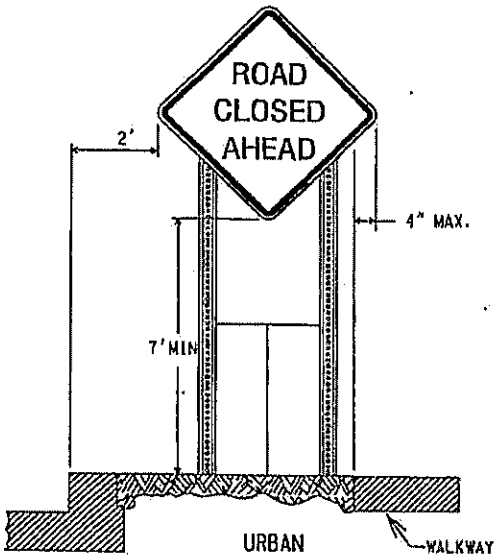

(CURBED AREAS OR WHERE WALKWAYS ARE PRESENT)

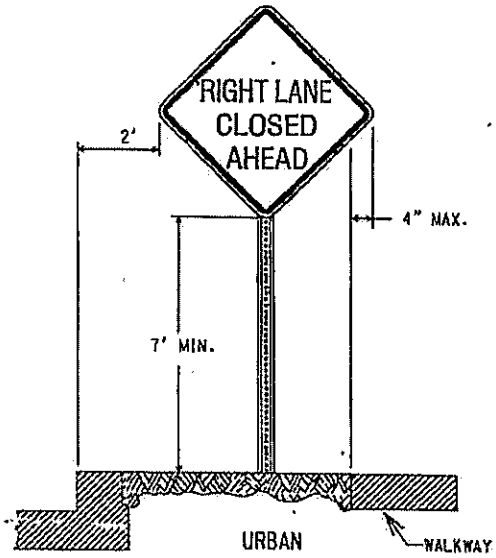

(CURBED AREAS OR WHERE WALKWAYS ARE PRESENT)

BOTTOM HEIGHT AND OFFSET

NOT TO SCALE

MICHIGAN DEPARTMENT OF TRANSPORTATION BUREAU OF HIGHWAYS DELIVERY STANDARD PLAN	PENDING FHWA APPROVAL DATE	8/2006 PLAN DATE	WZD-100-A	SHEET 3 of11
File:PW/Doc/RD/T&S/Typ/Dev/Sign MainTraf D/WZD-100-A Rev. 8/21/06 ECH				

NOTE: THE ORIGINAL SIGNED COPY IS KEPT ON FILE AT THE MICHIGAN DEPARTMENT OF TRANSPORTATION.

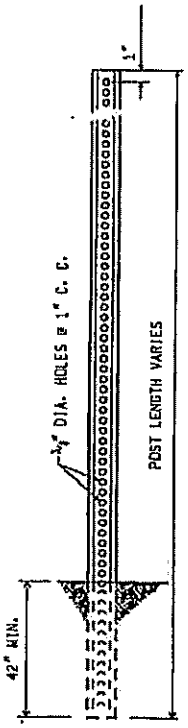

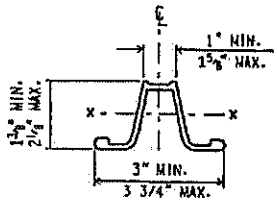

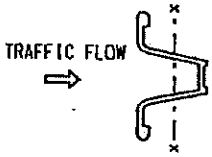

WEIGHT = 3 lbs/ft
SECT. MOD. X.-X. = 0.31 CUBIC INCHES MIN.

3 lb. U - CHANNEL STEEL POST
(NO SPLICE)

MOUNT SIGN ON OPEN FACE OF
U - CHANNEL STEEL POST

NOT TO SCALE

MICHIGAN DEPARTMENT OF TRANSPORTATION BUREAU OF HIGHWAYS DELIVERY STANDARD PLAN	PENDING FHWA APPROVAL DATE	8/2006 PLAN DATE	WZD-100-A	SHEET 4 of11
File:PN/Doc/RD/T&S/Typ/Dev/Sign MainTraf D/WZD-100-A Rev. 8/21/06 ECH				

NOTE: THE ORIGINAL SIGNED COPY IS KEPT ON FILE AT THE MICHIGAN DEPARTMENT OF TRANSPORTATION.

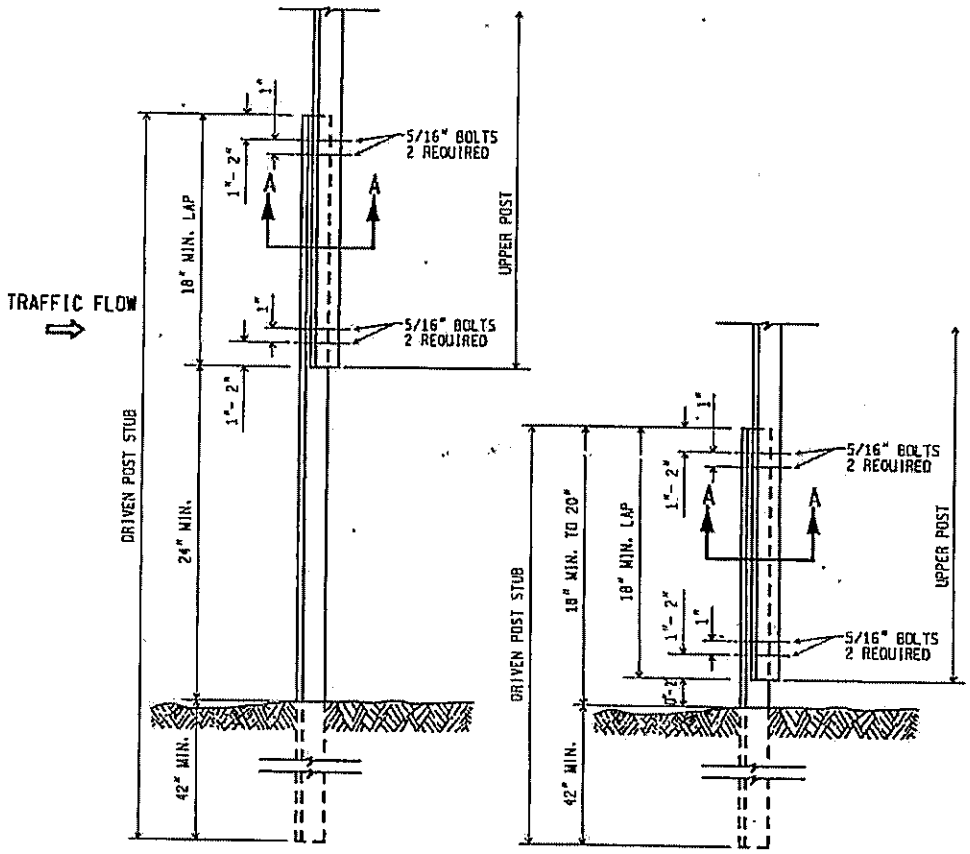

UPPER SPLICE

LOWER SPLICE

3 lb. U - CHANNEL STEEL POST
(WITH SPLICE)

MOUNT SIGN ON OPEN FACE OF
UPPER U - CHANNEL STEEL POST

NOT TO SCALE

MICHIGAN DEPARTMENT OF TRANSPORTATION BUREAU OF HIGHWAYS DELIVERY STANDARD PLAN	PENDING FHWA APPROVAL DATE	8/2006 PLAN DATE	WZD-100-A	SHEET 5 of11
File:PW/Doc/RD/T&S/Typ/Dev/Sign MainTraf D/WZD-100-A Rev. 8/21/06 ECH				

NOTE: THE ORIGINAL SIGNED COPY IS KEPT ON FILE AT THE MICHIGAN DEPARTMENT OF TRANSPORTATION.

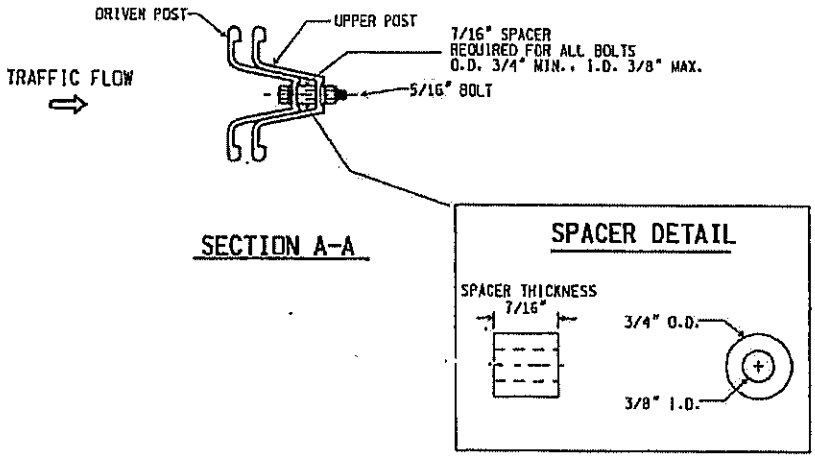

NOTES:

1. THE SPACER THICKNESS SHALL BE 1/16" LESS THAN THE GAP BETWEEN THE POST WHEN POSITIONED IN THE UNBOLTED CONFIGURATION.

2. THE EXTERIOR BOLT (CLOSEST TO LAP), SPACER, WASHER, AND NUT SHALL BE INSTALLED IN A PREPUNCHED HOLE 1" to 2" FROM THE END OF THE LAP.

3. THE INTERIOR BOLT (FARTHEST FROM LAP), SPACER, WASHER, AND NUT SHALL BE INSTALLED IN THE NEXT PREPUNCHED HOLE.

4. THE DRIVEN POST SHALL ALWAYS BE MOUNTED IN FRONT OF THE UPPER POST WITH RESPECT TO THE ADJACENT ONCOMING TRAFFIC, REGARDLESS OF THE DIRECTION THE SIGN IS FACING.

5. THE SPLICE LAP SHALL BE FASTENED BY FOUR-5/16" DIA. GALVANIZED A449 BOLTS (SAE J429 GRADE 5) OR GALVANIZED A325 BOLTS.

3 lb. U - CHANNEL STEEL POST
(WITH SPLICE)

NOT TO SCALE

MICHIGAN DEPARTMENT OF TRANSPORTATION BUREAU OF HIGHWAYS DELIVERY STANDARD PLAN	PENDING FHWA APPROVAL DATE	8/2006 PLAN DATE	WZD-100-A	SHEET 6 of11
File:PM/Doc/RD/T&S/Typ/Dev/Sign MainTraf D/WZD-100-A Rev. 8/21/06 ECH				

NOTE: THE ORIGINAL SIGNED COPY IS KEPT ON FILE AT THE MICHIGAN DEPARTMENT OF TRANSPORTATION.

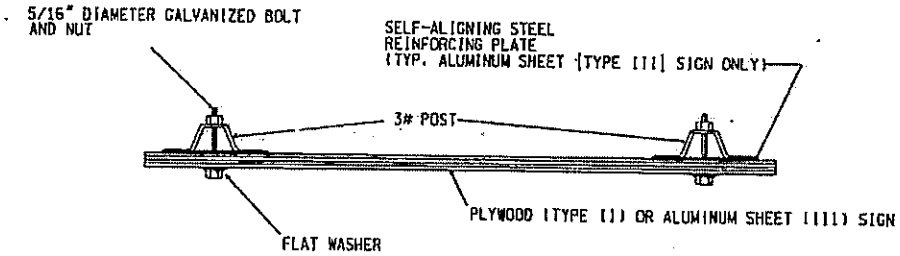

SIGN TO 3 lb. POST CONNECTION

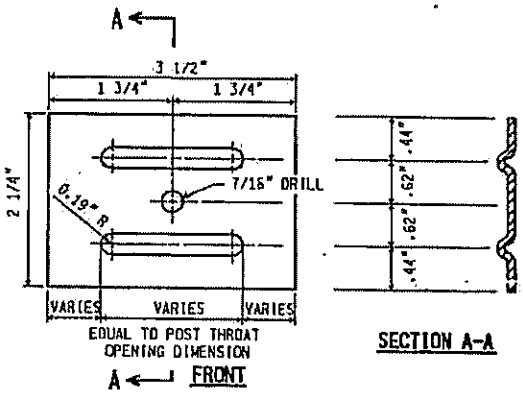

NOTES: (FOR STEEL SIGN REINF' PLATE)

1. MATERIAL: 12 GAUGE CARBON STEEL.
2. TOLERANCE ON ALL DIMENSIONS ± 0.0625"
3. FINISH-AFTER STAMPING AND PUNCHING. GALVANIZE ACCORDING TO CURRENT SPECIFICATIONS FOR ZINC (HOT GALVANIZE) COATINGS ON PRODUCTS FABRICATED FROM PLATES OR STRIPS

STEEL SIGN REINFORCING PLATE
REQUIRED FOR TYPE III SIGNS ONLY

3 lb. U - CHANNEL STEEL POST SIGN CONNECTION

NOT TO SCALE

MICHIGAN DEPARTMENT OF TRANSPORTATION BUREAU OF HIGHWAYS DELIVERY STANDARD PLAN	PENDING FHWA APPROVAL DATE	8/2006 PLAN DATE	WZD-100-A	SHEET 7 of 11
File:PW/Doc/RD/T&S/Typ/Dev/Sign MainTraf D/WZD-100-A Rev. 8/21/06 FCH				

NOTE: THE ORIGINAL SIGNED COPY IS KEPT ON FILE AT THE MICHIGAN DEPARTMENT OF TRANSPORTATION.

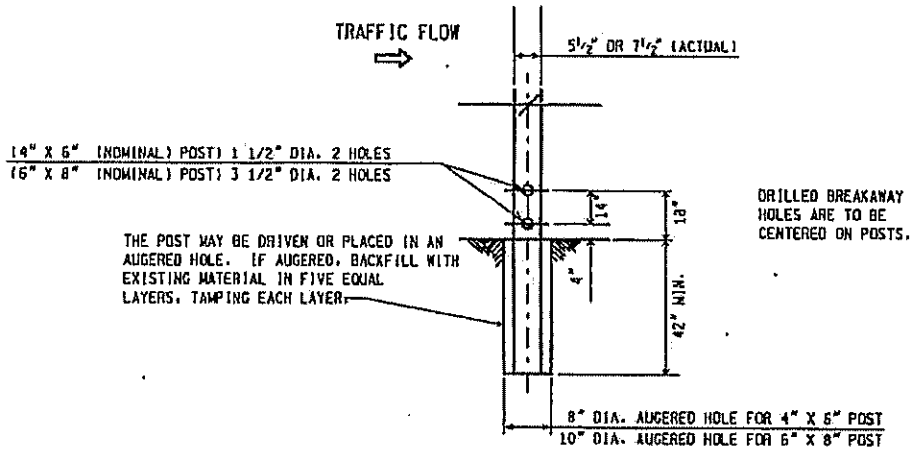

WOOD POST BREAKAWAY HOLES/ DIRECT EMBEDMENT DETAILS

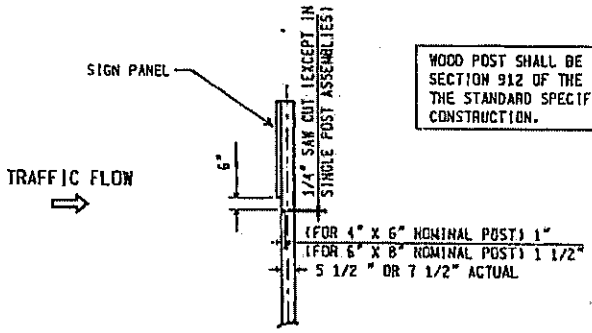

WOOD POST SHALL BE IN CONFORMANCE TO SECTION 912 OF THE CURRENT EDITION OF THE STANDARD SPECIFICATIONS FOR CONSTRUCTION.

SAW CUT DETAIL (MULTIPLE POST INSTALLATIONS)

WOOD POST DETAILS

NOT TO SCALE

MICHIGAN DEPARTMENT OF TRANSPORTATION BUREAU OF HIGHWAYS DELIVERY STANDARD PLAN	PENDING FHWA APPROVAL DATE	8/2006 PLAN DATE	WZD-100-A	SHEET 8 of 11
File:PW/Doc/RD/TAS/Typ/Dev/Sign MainTrof D/WZD-100-A Rev. 8/21/06 ECH				

NOTE: THE ORIGINAL SIGNED COPY IS KEPT ON FILE AT THE MICHIGAN DEPARTMENT OF TRANSPORTATION.

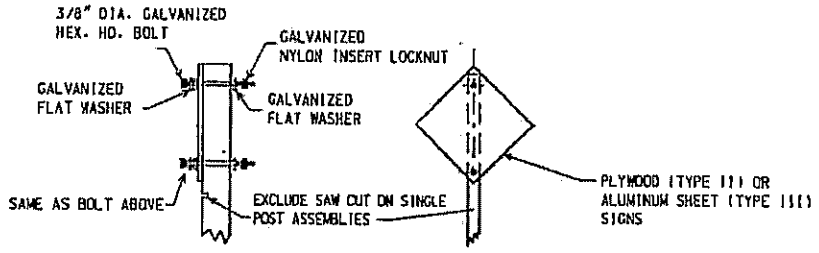

TYPE II AND TYPE III SIGNS

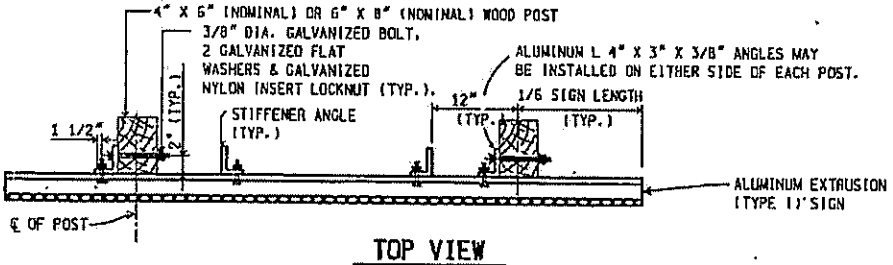

TOP VIEW
TYPE I SIGN

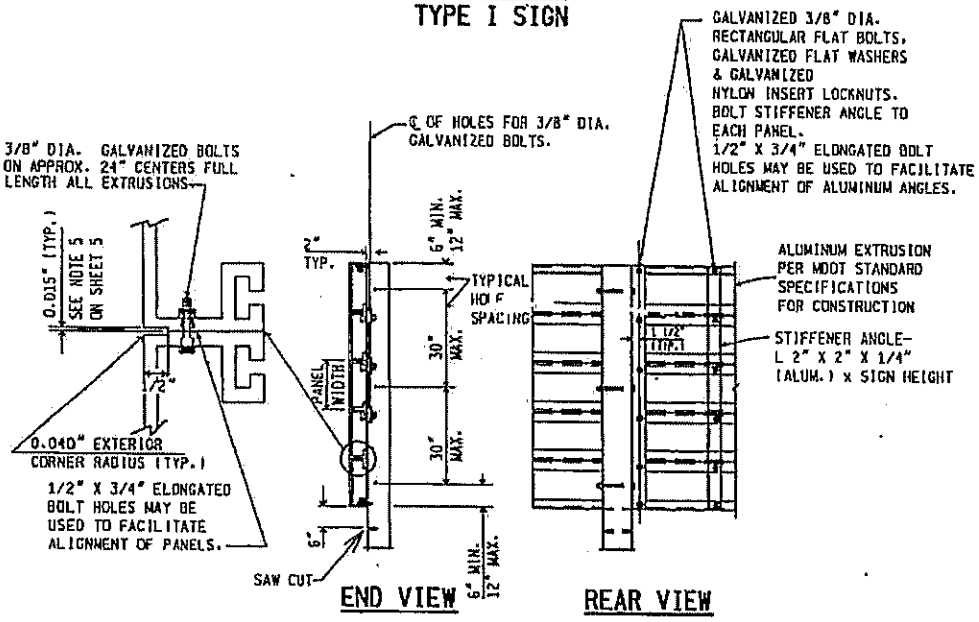

END VIEW
REAR VIEW

TYPE I SIGN - ERECTION DETAILS
WOOD POST CONNECTIONS

NOT TO SCALE

MICHIGAN DEPARTMENT OF TRANSPORTATION BUREAU OF HIGHWAYS DELIVERY STANDARD PLAN	PENDING FHWA APPROVAL DATE	8/2006 PLAN DATE	WZD-100-A	SHEET 9 of11
File:PW/Doc/RD/T&S/Typ/Dev/Sign MainTraf D/WZD-100-A Rev. 8/21/06 ECH				

NOTE: THE ORIGINAL SIGNED COPY IS KEPT ON FILE AT THE MICHIGAN DEPARTMENT OF TRANSPORTATION.

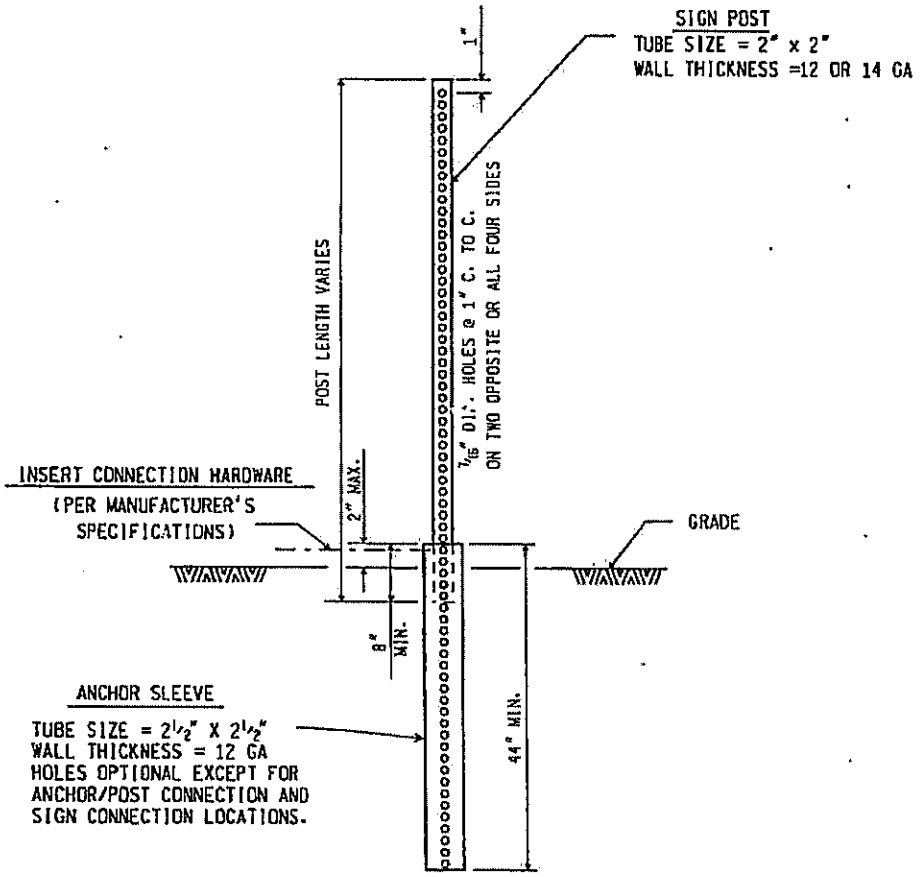

SQUARE TUBULAR STEEL POST

NOT TO SCALE

MICHIGAN DEPARTMENT OF TRANSPORTATION BUREAU OF HIGHWAYS DELIVERY STANDARD PLAN	PENDING FHWA APPROVAL DATE	8/2006 PLAN DATE	WZD-100-A	SHEET 10 of 11
File:PW/Doc/RD/T&S/Typ/Dev/Sign MainTraf D/WZD-100-A Rev. 8/21/06 ECH.				

NOTE: THE ORIGINAL SIGNED COPY IS KEPT ON FILE AT THE MICHIGAN DEPARTMENT OF TRANSPORTATION.

GENERAL NOTES:

1. A MAXIMUM OF TWO POSTS WITHIN A 7 FOOT PATH IS PERMITTED.
2. ALL SIGN POSTS SHALL COMPLY WITH NCHRP 350.
3. ALL POSTS SHALL BE EMBEDDED A MINIMUM OF 42".
4. BRACING OF POST IS NOT PERMITTED.
5. SIGN SHALL BE LEVEL, AND UPRIGHT FOR THE DURATION OF INSTALLATION.
6. ERECT POSTS SO THE SIGN FACE AND SUPPORTS DO NOT VARY FROM PLUMB BY MORE THAN 3/16" IN 3'. PROVIDE A CENTER-TO-CENTER DISTANCE BETWEEN POSTS WITHIN 2 PERCENT OF PLAN DISTANCE.
7. NO MORE THAN ONE SPLICE PER POST, AS SHOWN, WILL BE PERMITTED.
8. POST TYPES SHALL NOT BE MIXED WITHIN A SIGN SUPPORT INSTALLATION.
9. NO VERTICAL JOINTS ARE PERMITTED IN SIGN. NO HORIZONTIAL JOINTS THROUGH SIGN LEGEND OR SYMBOLS ARE PERMITTED IN SIGN
10. REMOVE SIGN POSTS AND/OR POST STUBS IN THEIR ENTIRETY WHEN NO LONGER REQUIRED.
11. ALL LABOR, MATERIALS, AND EQUIPMENT, INCLUDING TEMPORARY SUPPORTS REQUIRED TO INSTALL, MAINTAIN, RELOCATE, COVER, AND/OR REMOVE THE TEMPORARY SIGN, INCLUDING SUPPORTS, ARE CONSIDERED TO BE INCLUDED IN THE COST OF THE TEMPORARY SIGN.
12. SAW CUTS IN WOOD POSTS ARE TO BE PARALLEL TO THE BOTTOM OF THE SIGN.
13. POSTS SHALL NOT EXTEND MORE THAN 4" ABOVE TOP OF SIGN.

NOT TO SCALE

MICHIGAN DEPARTMENT OF TRANSPORTATION BUREAU OF HIGHWAYS DELIVERY STANDARD PLAN	PENDING FHWA APPROVAL DATE	8/2006 PLAN DATE	WZD-100-A	SHEET 11 of 11
File:PW/Doc/RD/T&S/Typ/Dev/Sign MainTraf D/WZD-100-A Rev. 8/21/06 ECH				

NOTE: THE ORIGINAL SIGNED COPY IS KEPT ON FILE AT THE MICHIGAN DEPARTMENT OF TRANSPORTATION.

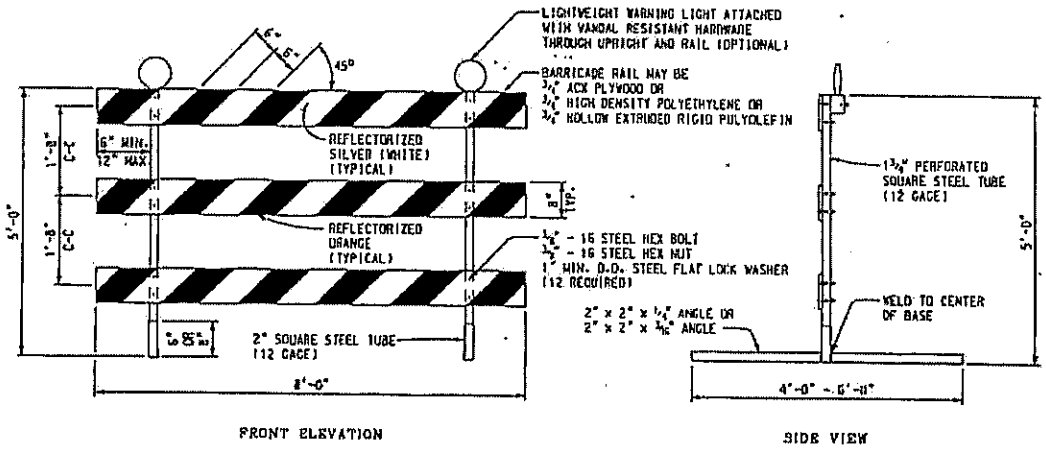

PERFORATED SQUARE STEEL TUBE OPTION

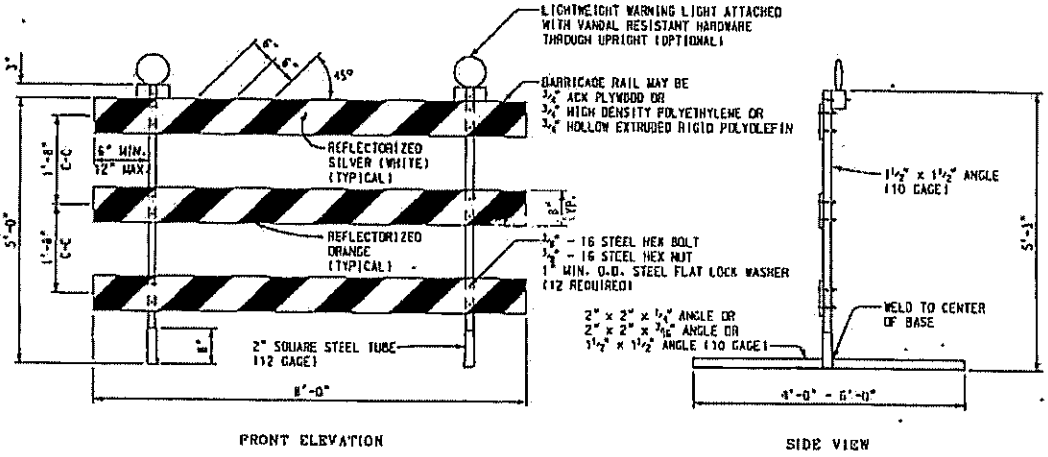

ANGLE IRON OPTION

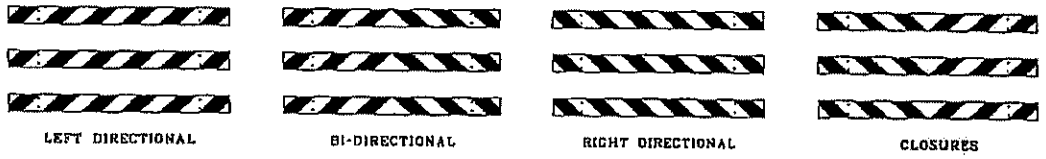

BARRICADE RAIL SHEETING OPTIONS
TYPE III BARRICADES

Other Type III Barricades meeting current NCHRP crash worthy criteria can be found on the FHWA Safety website at http://safety.fhwa.dot.gov/roadway_dept/road_hardware/wzd.htm

NOT TO SCALE

File: T&S/Typ/Signs/WorkZones/wzd 125 d Rev. 09/22/09 PJ

MDOT Michigan Department of Transportation

PREPARED BY TRAFFIC AND SAFETY

DRAWN BY: ECH

CHECKED BY: MWB

ENGINEER OF DELIVERY

ENGINEER OF DEVELOPMENT (SPECIAL DETAIL)

FHWA APPROVAL DATE

MICHIGAN DEPARTMENT OF TRANSPORTATION
BUREAU OF HIGHWAYS DELIVERY STANDARD PLAN FOR

Temporary Traffic Control Devices

9/22/09 PLAN DATE

WZD-125-E

SHEET 1 of 3

NOTE: THE ORIGINAL SIGNED COPY IS KEPT ON FILE AT THE MICHIGAN DEPARTMENT OF TRANSPORTATION.

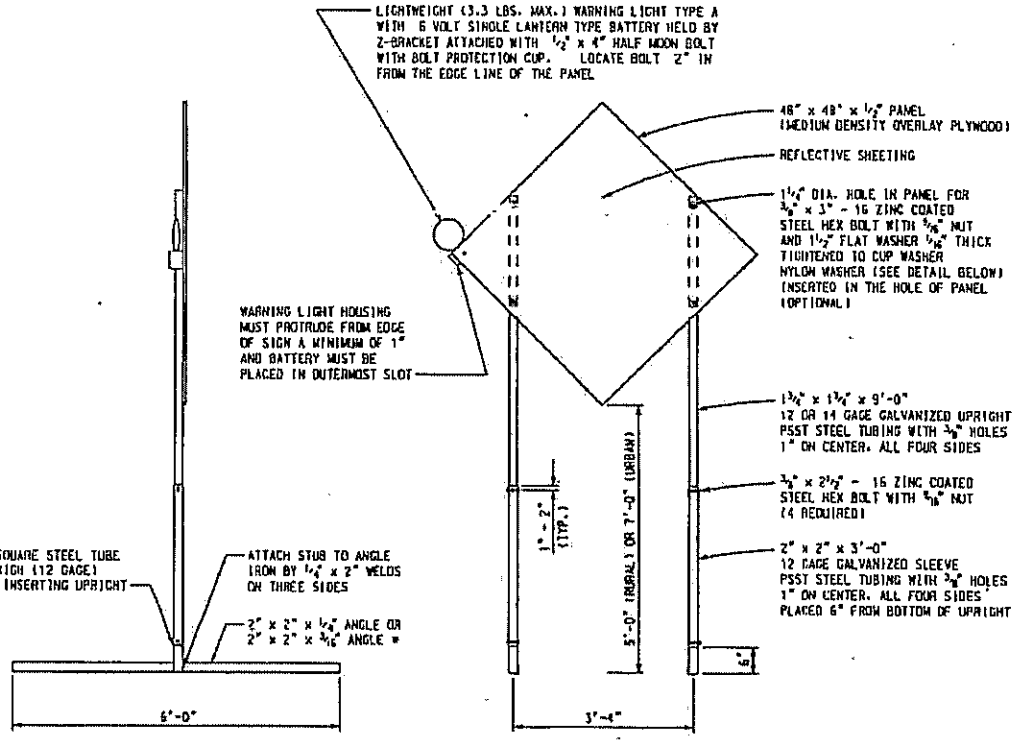

TEMPORARY SIGN SUPPORT

(WARNING LIGHT PLACED ON SIDE CLOSEST TO TRAFFIC)

* SIGN STAND IS BALLASTED WITH FOUR OR MORE 35 LB SANDBAGS. A MINIMUM OF ONE ON EACH END.

UPRIGHTS SHALL NOT EXTEND ABOVE THE SIGN PANEL.

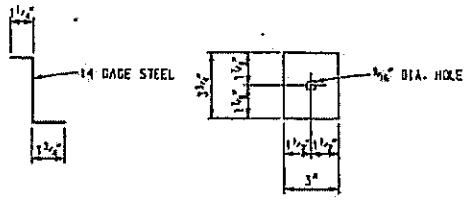

Z-BRACKET DETAIL

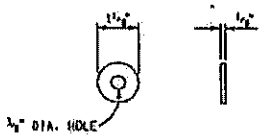

OPTIONAL NYLON WASHER

Other temporary sign supports meeting current NCHRP crash worthy criteria can be found on the FHWA Safety website at http://safety.fhwa.dot.gov/roadway_dept/road_hardware/wzd.htm

NOT TO SCALE

MICHIGAN DEPARTMENT OF TRANSPORTATION BUREAU OF HIGHWAYS DELIVERY STANDARD PLAN	(SPECIAL DETAIL) FHWA APPROVAL DATE	9/22/09 PLAN DATE	WZD-125-E	SHEET 2 of 3
File: TAS/Typ/Signs/WorkZones/wzd.125 d	Rev. 09/22/09 PJ			

NOTE: THE ORIGINAL SIGNED COPY IS KEPT ON FILE AT THE MICHIGAN DEPARTMENT OF TRANSPORTATION.

PLASTIC DRUM

PROPOSED TYPE III BARRICADE

EXISTING TYPE III BARRICADE

SYMBOLS TO BE USED ON PLANS

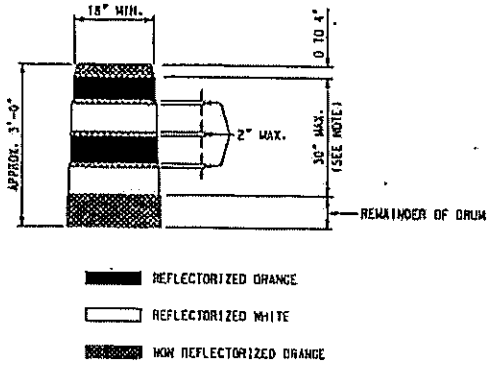

NOTE:
DRUMS SHALL HAVE AT LEAST 4 HORIZONTAL REFLECTORIZED STRIPES (2 ORANGE AND 2 WHITE) OF 6" UNIFORM WIDTH, ALTERNATING IN COLOR WITH THE TOPMOST REFLECTORIZED STRIPE BEING ORANGE. NON REFLECTORIZED SPACES BETWEEN THE HORIZONTAL REFLECTORIZED ORANGE AND WHITE STRIPES SHALL BE ORANGE IN COLOR AND EQUAL IN WIDTH.

PLASTIC DRUM

NOTES:

2" PERFORATED SQUARE STEEL TUBES MAY BE USED TO FABRICATE THE HORIZONTAL BASE OF THE TYPE III BARICADE.

WARNING LIGHTS SHALL BE PLACED ACCORDING TO THE CURRENT STANDARD SPECIFICATIONS FOR CONSTRUCTION AND ALL OTHER PROVISIONS IN THE CONTRACT WHEN THEY ARE USED ON TYPE III BARRICADES.

SEE ROAD STANDARD PLANS R-113-SERIES FOR TEMPORARY CROSSOVERS FOR DIVIDED ROADWAY, AND R-126-SERIES FOR TYPICAL LOCATION AND SPACING OF PLASTIC DRUMS FOR PLACEMENT OF TEMORARY CONCRETE BARRIER.

SIGNS, BARRICADES, AND PLASTIC DRUMS SHALL BE FACED WITH PRESSURE-SENSITIVE REFLECTIVE SHEETING ACCORDING TO THE CURRENT STANDARD SPECIFICATIONS FOR CONSTRUCTION.

SANDBAGS SHALL BE USED WHEN SUPPLEMENTAL WEIGHTS ARE REQUIRED TO ACHIEVE STABILITY OF THE BARRICADE. THE SANDBAGS SHALL BE PLACED SO THEY WILL NOT COVER OR OBSTRUCT ANY REFLECTIVE PORTION OF THE TRAFFIC CONTROL DEVICE.

NOT TO SCALE

MICHIGAN DEPARTMENT OF TRANSPORTATION BUREAU OF HIGHWAYS DELIVERY STANDARD PLAN	(SPECIAL DETAIL) FHWA APPROVAL DATE	9/22/09	WZD-125-E	SHEET 3 of 3
File: T&S/Typ/Signs/WorkZones/wzd 125 d	Rev. 09/22/09 PJ	PLAN DATE		

NOTE: THE ORIGINAL SIGNED COPY IS KEPT ON FILE AT THE MICHIGAN DEPARTMENT OF TRANSPORTATION.

TITLE SHEET
CITY OF DETROIT

MAYOR
MIKE DUGGAN

CONTROL SECTION: **DEPARTMENT OF PUBLIC WORK**
RON BRUNDIGE, DIRECTOR
JOSE ABRAHAM , DEPUTY DIRECTOR

JOB NO.: CONTRACT PW-6971

CPO : 2905959

SPO : 2905960

LOCAL AGENCY: City of Detroit, Wayne County

CONTRACT FOR: Approximately 5.0 miles of cold milling HMA surface, HMA resurfacing, concrete curb, sidewalk, curb ramps, driveway approaches, drainage structure adjustments, pavement removal and replacement, lane ties, pavement markings and miscellaneous construction.

LOCATION:

ALTER:	**FROM CHANDLER PARK TO E. JEFFERSON**
CADIEUX:	**FROM CHANDLER PARK TO MORANG**
MACK:	**FROM I-75 TO RIOPELLE**
E. 7 MILE:	**FROM I-75 TO CONANT**
HARPER :	**FROM CADIEUX TO I-94 CROSS OVER**

STANDARD PLANS

R-28-G	R-29-H	R-100- G
R-44-F		WZD-100-E*
R-83-B	R- 30-E	WZD-125-E*

*** Denotes Special Details**

THE IMPROVEMENTS COVERED BY THESE PLANS ARE BASED ON THE MICHIGAN DEPARTMENT OF TRANSPORTATION LOCAL AGENCY PROGRAM GUIDE LINES FOR GEOMETRICS (3R) DATED AUGUST 28, 2008 EXCEPT WHERE OTHERWISE INDICATED ON THESE PLANS OR IN THE PROPOSAL AND SUPPLEMENTAL SPECIFICATIONS CONTAINED THEREIN, ALL MATERIALS AND WORKMANSHIP SHALL BE IN ACCORDANCE WITH THE MICHIGAN DEPARTMENT OF TRANSPORTATION STANDARD SPECIFICATIONS FOR CONSTRUCTION, 2012 VERSION AND MICHIGAN MANUAL OF UNIFORM TRAFFIC CONTROL DEVICES, 2009 EDITION.

STATE OF MICHIGAN
NOEL Y. SANTOS
ENGINEER NO. 41031
LICENSED PROFESSIONAL ENGINEER
(SEAL)

LOCAL AUTHORITY APPROVAL
CITY OF DETROIT
GOVERNMENTAL AGENCY

APPROVED: Noel Y. Santos, P.E.
ENGINEER

MARCH 11, 2015
DATE

ALTER ROAD

E. JEFFERSON
TO
CHANDLER PARK

TRAFFIC DATA:

PRESENT: 11,920
FUTURE: 13,112
COMMERCIAL: 3%
POSTED SPEED: 30 MPH

TYPE OF PAVEMENT	ASPHALT OVER CONCRETE	
LENGTH		10,660 FEET
PAVEMENT WIDTH		40..46..72 FEET (VARIES)

SCHEDULE OF ITEMS

LOCATION: **ALTER: E. JEFFERSON TO CHANDLER PARK**

LENGTH: **10,660 FT** **WIDTH : 40 - 72 FT VARIES**

WORK TYPE: Cold Milling, HMA Resurfacing, Concrete Curb, Sidewalk, Driveway Approach, Drainage Improvements and Misc Construction

Description of Work	Estimated Quantity	Item Unit
Mobilization, Max. ____	0.4	LS
**Sidewalk, Rem	1246	Syd
**Curb, Rem, Modified	986	Ft
Pavt, Rem	0	Syd
Excavation, Earth, Modified	20	Cyd
Granular Material, Cl II	20	Cyd
Aggregate Base, 4 inch	150	Syd
Sewer Cleanout, Modified	690	Ft
Dr Structure Cover, Modified	33499	Lb
Catch Basin A, Modified	1	Ea
Catch Basin BT, Modified	1	Ea
Dr Structure Cleaning, Modified	69	Ea
Dr Structure Cover, Adj, Case 1, Modified	130	Ea
Dr Structure Cover, Adj, Case 2, Modified	7	Ea
Reconstructing Dr Structure, Case 1, Modified	1	Ea
Reconstructing Dr Structure, Case 2, Modified	1	Ea
Pavt for Butt Joints, Rem	1137	Syd
Hand Patching	10	Ton
HMA, 4E3	5884	Ton
HMA, 5E3	4413	Ton
Cold Milling HMA Surface, Modified	53493	Syd
HMA Surface, Rem	1634	Syd
Conditioning Existing Pavement, Modified	721	Ton
HMA Approach, Modified	315	Ton
HMA Shoulder, Modified	61	Ton
Pavt, Cleaning	0	LS
Conc Pavt , Misc, Nonreinf, 8 inch, Modified	0	Syd
Pavt Repr, Nonreinf Conc, 10 inch, Modified	150	Syd
**Curb, Conc, Detail CD, Modified	986	Ft

** Estimated quantities for use at the discretion of the Engineer and subject to the Bureau Chief's or Head Engineer's approval during construction.

LOCATION: ALTER: E. JEFFERSON TO CHANDLER PARK

LENGTH: 10,660 FT **WIDTH :** 40 - 72 FT VARIES

WORK TYPE: Cold Milling, HMA Resurfacing, Concrete Curb, Sidewalk, Driveway Approaches, Drainage Improvements and Misc Construction

Description of Work	Estimated Quantity	Item Unit
Pavt Repr, Rem, Modified	150	Syd
Sidewalk, Conc Repl, 4 inch with Tree Roots, Modified	144	Sft
Sidewalk, Conc Repl, 6 inch with Tree Roots, Modified	0	Sft
Detectable Warning Surface Tiles, Modified	415	Ft
Sidewalk Ramp, ADA, Modified	4044	Sft
Sidewalk, Conc, 4 inch, Modified	6696	Sft
**Sidewalk, Conc, 6 inch, Modified	332	Sft
Pavt Mrkg, Ovly Cold Plastic, 18 inch, Stop Bar	337	Ft
Pavt Mrkg, Ovly Cold Plastic, 6 inch, Crosswalk	933	Ft
Pavt Mrkg, Ovly Cold Plastic, 12 inch, Crosswalk	130	Ft
Pavt Mrkg, Ovly Cold Plastic, Only	2	Ea
Pavt Mrkg, Ovly Cold Plastic, Thru Arrow Sym	1	Ea
Pavt Mrkg, Ovly Cold Plastic, Thru and Rt Turn Arrow Sym	0	Ea
Pavt Mrkg, Ovly Cold Plastic, Rt Turn Arrow Sym	1	Ea
Pavt Mrkg, Ovly Cold Plastic, Lt Turn Arrow Sym	0	Ea
Pavt Mrkg, Sprayable Thermopl, 4 inch, White	50	Ft
Pavt Mrkg, Sprayable Thermopl, 4 inch, Yellow	18830	Ft
Pavt Mrkg, Thermopl, 6 inch, Crosswalk	1851	Ft
Pavt Mrkg, Sprayable Thermopl, 12 inch, Crosswalk	0	Ft
Pavt Mrkg, Thermopl, 18 inch, Stop Bar	316	Ft
Pavt Mrkg, Modified Urethane, 6 inch Cross Hatching, Yellow	24	Ft
Barricade, Type III, High Intensity, Double Sided, Lighted, Furn	4	Ea
Barricade, Type III, High Intensity, Double Sided, Lighted, Oper	4	Ea
Traffic Regulator Control	0.4	LS
Lighted Arrow, Type C, Furn	2	Ea
Lighted Arrow, Type C, Oper	2	Ea
Minor Traf Devices	0.4	LS
Plastic Drum, High Intensity, Furn	213.2	Ea
Plastic Drum, High Intensity, Oper	213.2	Ea
Sign, Type B, Temp, Prismatic, Furn	600	Sft
Sign, Type B, Temp, Prismatic, Oper	600	Sft
Water, Sodding/Seeding	0.8	Unit
Hydroseeding, Modified	50	Syd
Topsoil Surface, Furn, LM, Modified	4	Cyd
Water, Shutoff, Adj, Modified	18	Ea
Recessing for Pavt Mrkg, 6 inch	2784	Ft
Recessing for Pavt Mrkg, 12 inch	130	Ft
Recessing for Pavt Mrkg, 18 inch	653	Ft

ALTER ROAD

FROM	TO	LENGTH ACTUAL	LENGTH CHARGE CL	LENGTH CHARGE LL	SKETCH	WIDTH
RIVERSIDE	105 FT. N. OF FAIRFAX	4,841	—	1,210	W 10 SKIP Y.L. 16 E	26 FT
105 FT. N. OF FAIRFAX	130 FT. S. OF JEFFERSON	651	—	162	W 10 16 105' SKIP Y.L. 16 10 E	26 FT
130 FT. S. OF JEFFERSON	JEFFERSON	130	260	—	W 16 30' 100' 13 10 SKIP Y.L. 13 E	26 FT
JEFFERSON	KERCHEVAL	2,045	4,090	—	W E	40 FT
KERCHEVAL	E. WARREN	6,038	12,076	—	W E	46 FT
E. WARREN	ISLAND 118 FT. S. CHANDLER PARK E. OUTER DR.	1,761	3,522	—	*SEE NOTE W 15. E	46 FT

NOT IN CONTRACT

* NOTE:

D.Y.L. TO BE CONTINUOUS FROM WARREN THROUGH INTERSECTIONS TO ISLAND 118 FT. S. CHANDLER PARK OUTER DR.

CITY OF DETROIT
DEPARTMENT OF TRANSPORTATION
Transportation Engineering

ALTER LANING
RIVERSIDE - OUTER DRIVE

DRAWN R ROSIK
SCALE N A
DATE 7-23-91

NO. CL-55

BRUNING 76677 FORM # 1260

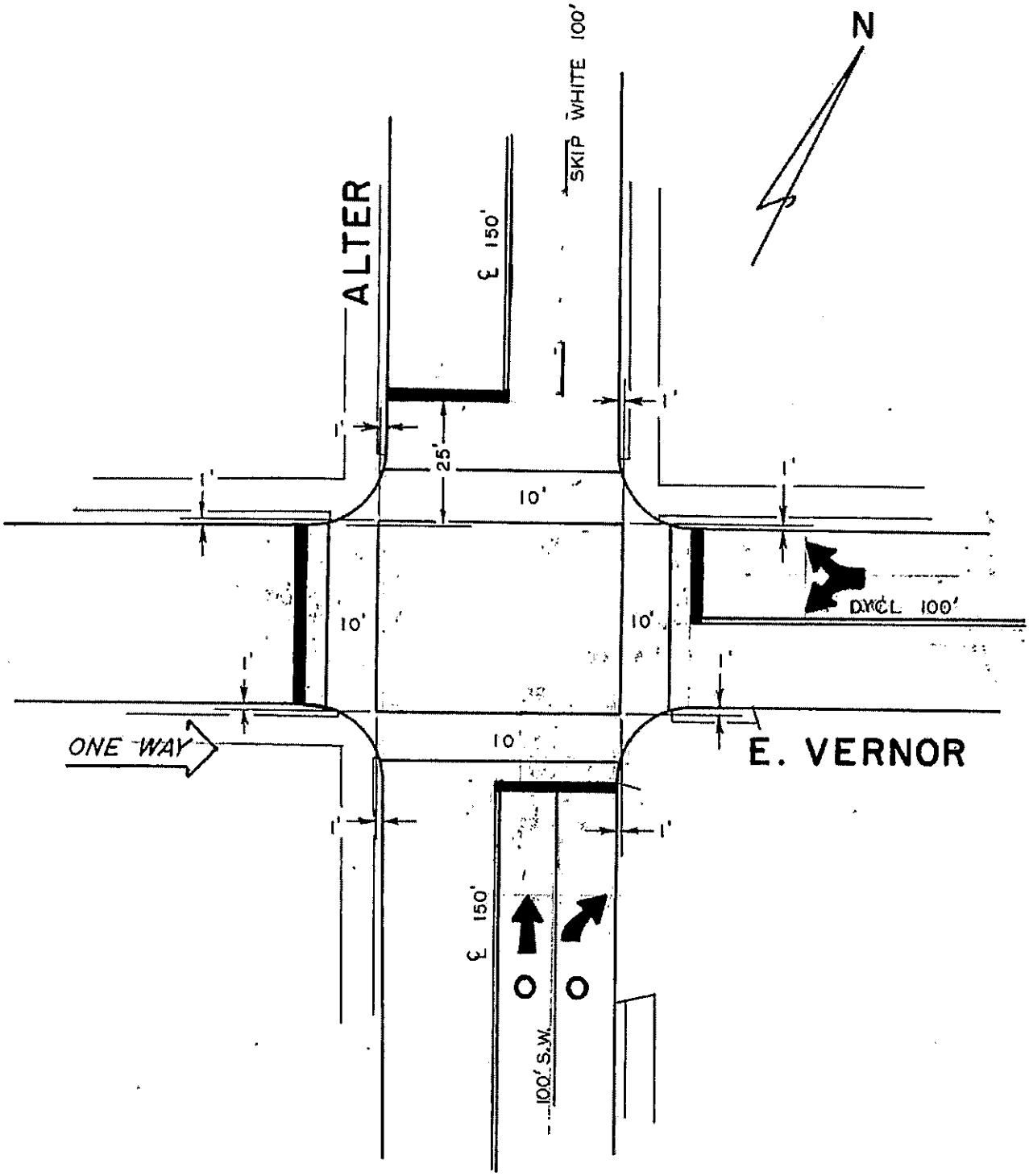

CITY OF DETROIT
DEPARTMENT OF STREETS AND TRAFFIC

ALTER - E. VERNOR

Rev. 1-4-95 AB
REV 5-21-68
PREV. DWG. FLD.

DRAWN HD
APPROVED
CHECKED
SCALE 1" = 30'
DATE 10-26-67

NO. E-12

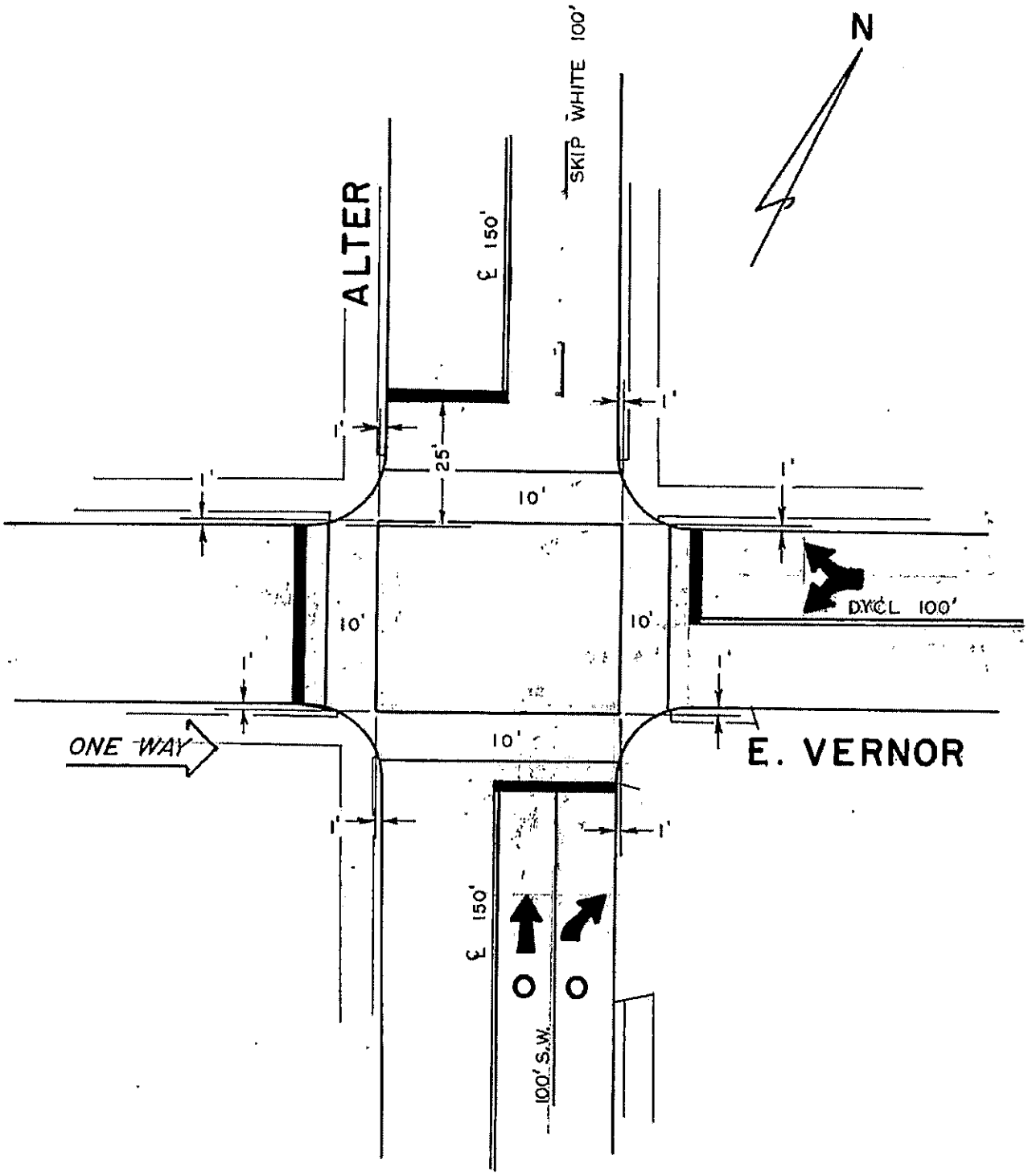

CITY OF DETROIT
DEPARTMENT OF STREETS AND TRAFFIC

ALTER - E. VERNOR

Rev. 1-4-95 AB
REV 5-21-68
PREV. DWG. FLD.

DRAWN HD
APPROVED
CHECKED
SCALE 1" = 30'
DATE 10-26-67

NO. E-12

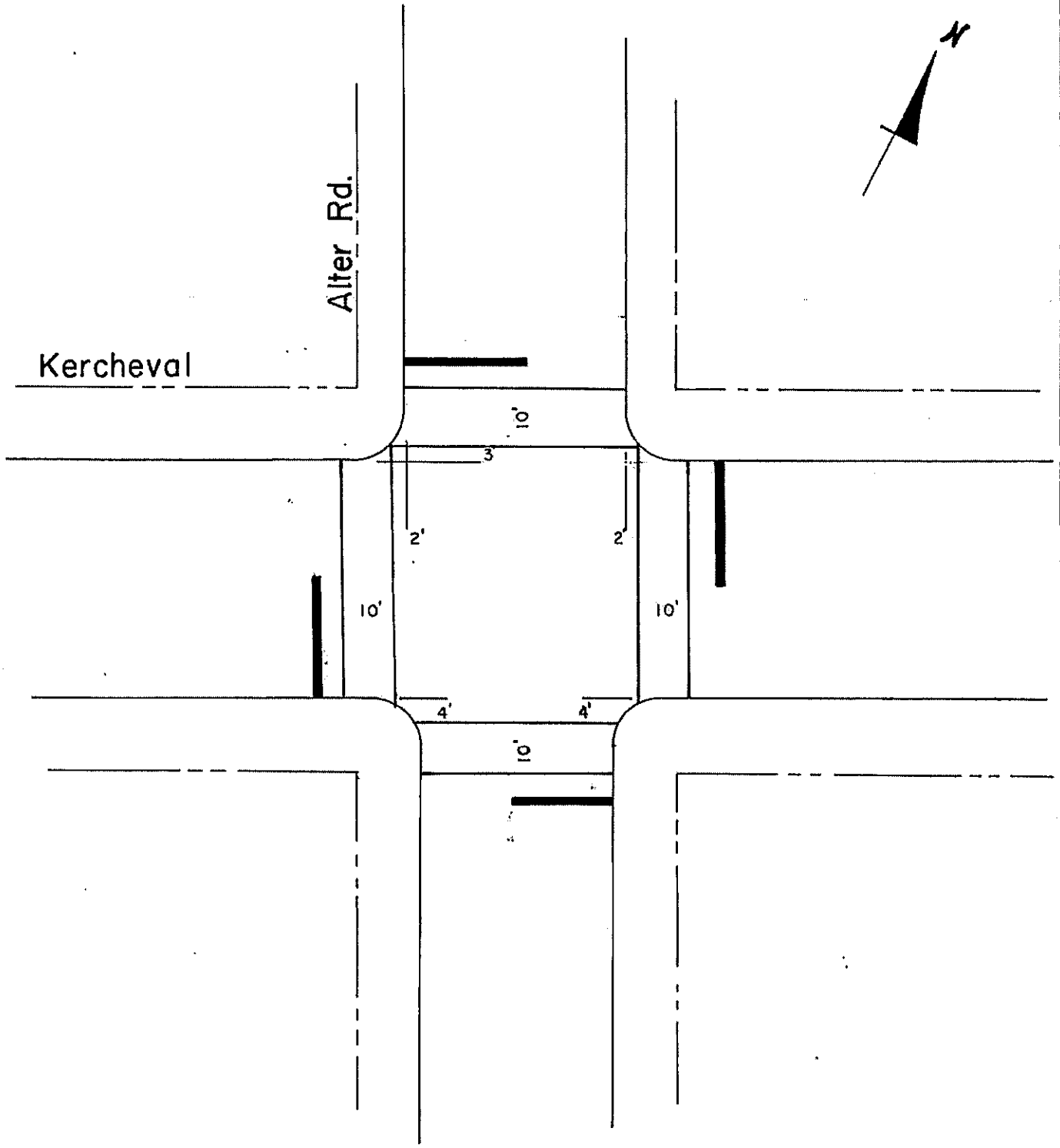

CITY OF DETROIT
DEPARTMENT OF TRANSPORTATION
PLANNING & TRAFFIC ENGINEERING

Alter — Kercheval

DRAWN A.L. Walker
SCALE 1" = 30'
DATE November 10, 1977

NO. E — 36

DRAWING NO: **E-48**

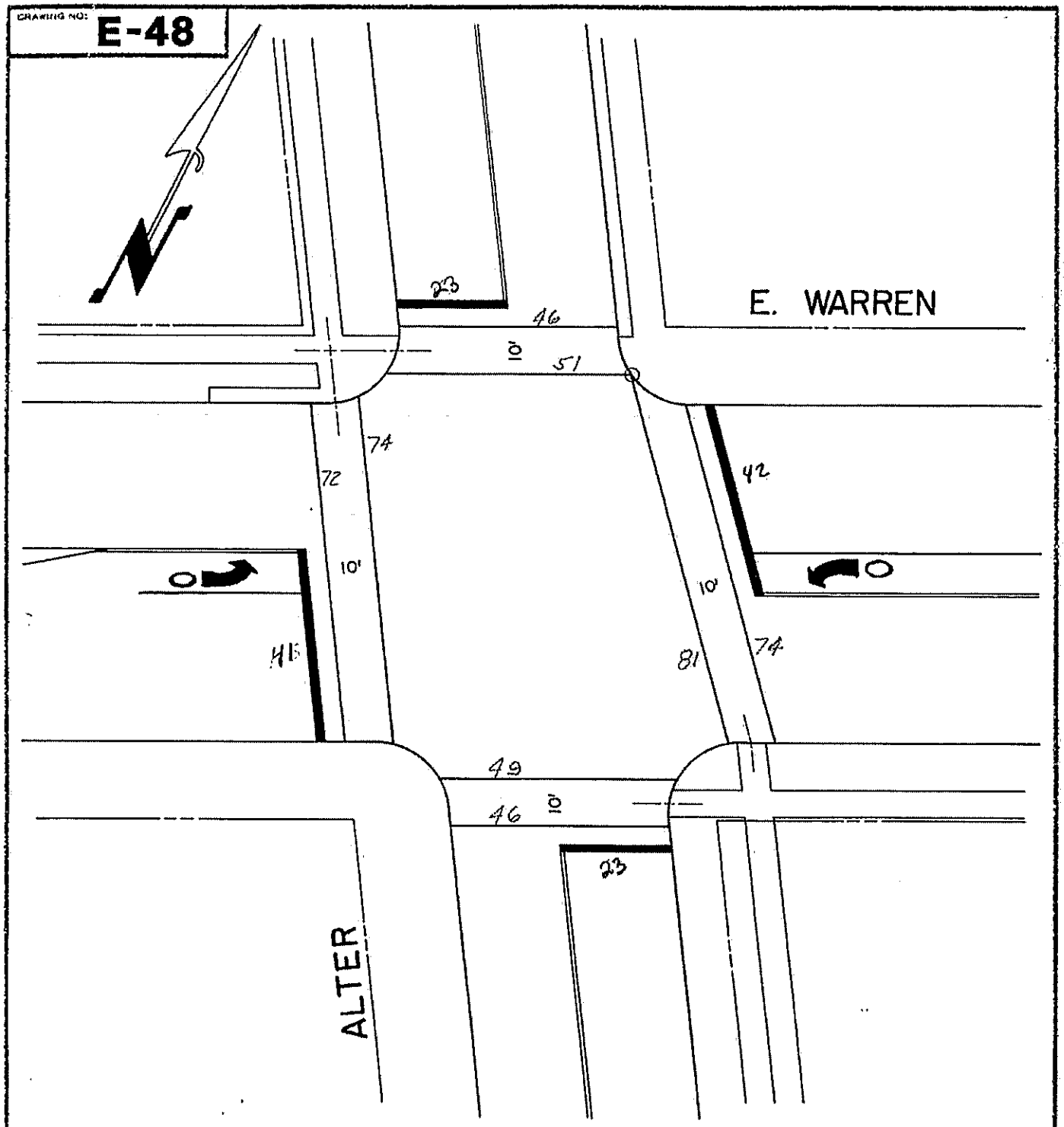

PAVEMENT MARKING QUANTITIES			
DATE: 8 JAN. 79	LINEAL FEET		
BY: D. R. ELLIS	CITY	STATE	COUNTY
CENTER LINES (4")			
STOP LINES (5")	384		
X-WALK LINES (5")	493		
LANE LINES (4")			
TOTAL	877		
ISLANDS (5")			
SYMBOLS (W)			
CROSSOVERS (Y)			

ZONE	LTR	DESCRIPTION	DATE	BY	CKD
		REVISIONS			

ALTER - E. WARREN

CITY OF DETROIT
DEPARTMENT OF TRANSPORTATION
TRANSPORTATION ENGINEERING DIVISION
SIGNS AND MARKINGS SECTION

DRAWN: Dennis R. Ellis
SCALE: 1" = 30'
DATE: 5 January 1979
DRAWING NO: **E-48**

3 & M FORM 4
29 NOV 1978

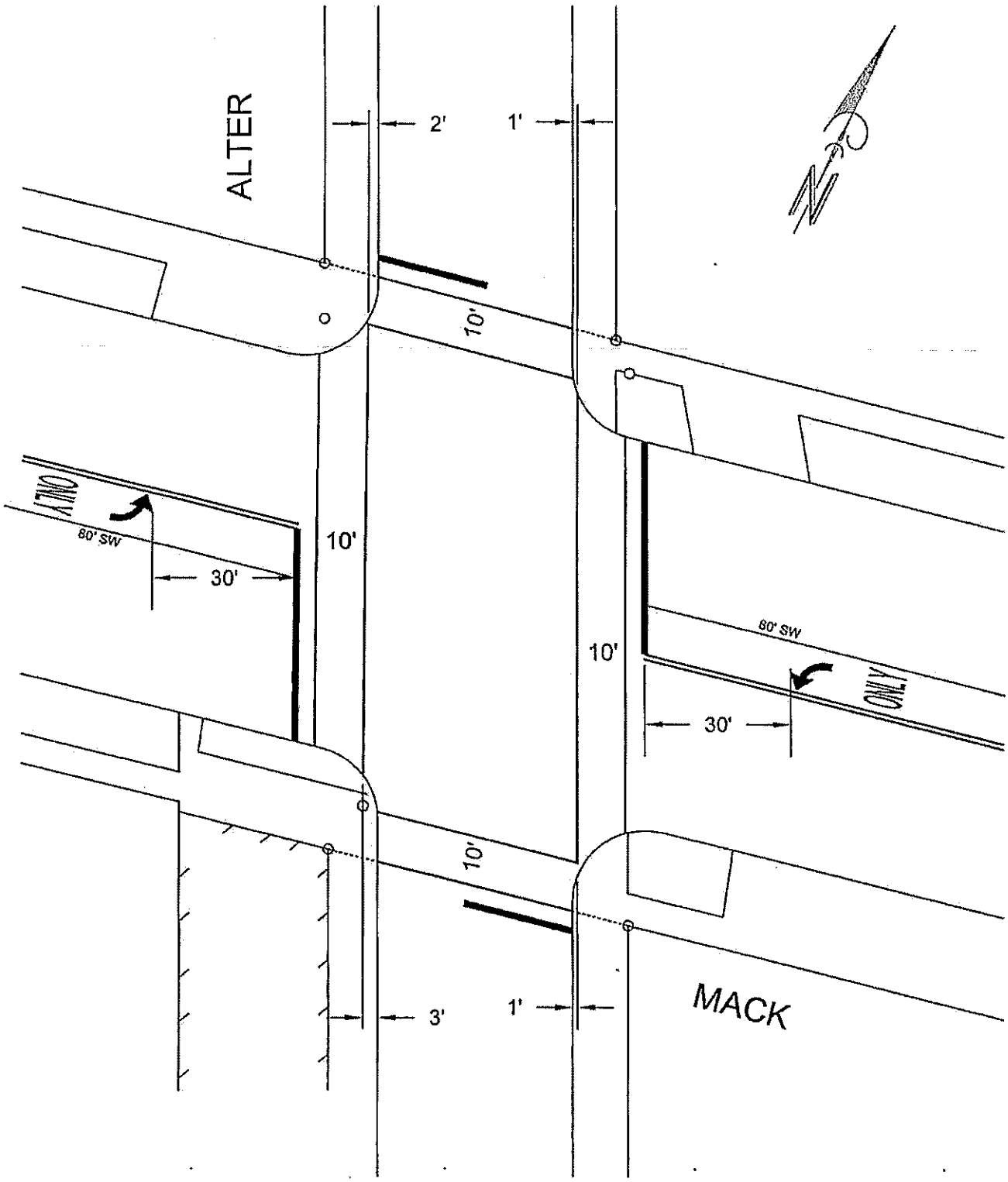

Rev. 06/16/2014 Added Left Turn Arrows
And Only Legends
PREV. 12/07/67 Dwg. Design Added 12/07/67

CITY OF DETROIT
DEPARTMENT OF PUBLIC WORKS
TRAFFIC ENGINEERING DIVISION

ALTER
MACK

DRAWN : A.D. BOLTON
SCALE : 1" = 30'
DATE : 05 - 22 - 2014

NO. E-77

:\bol drawing\Done - Unchecked\E-77-ALTER-MACK.dwg, 7/18/2014 10:42:59 AM, Canon iR2525_2530 UFRII LT.pc3, 1:360

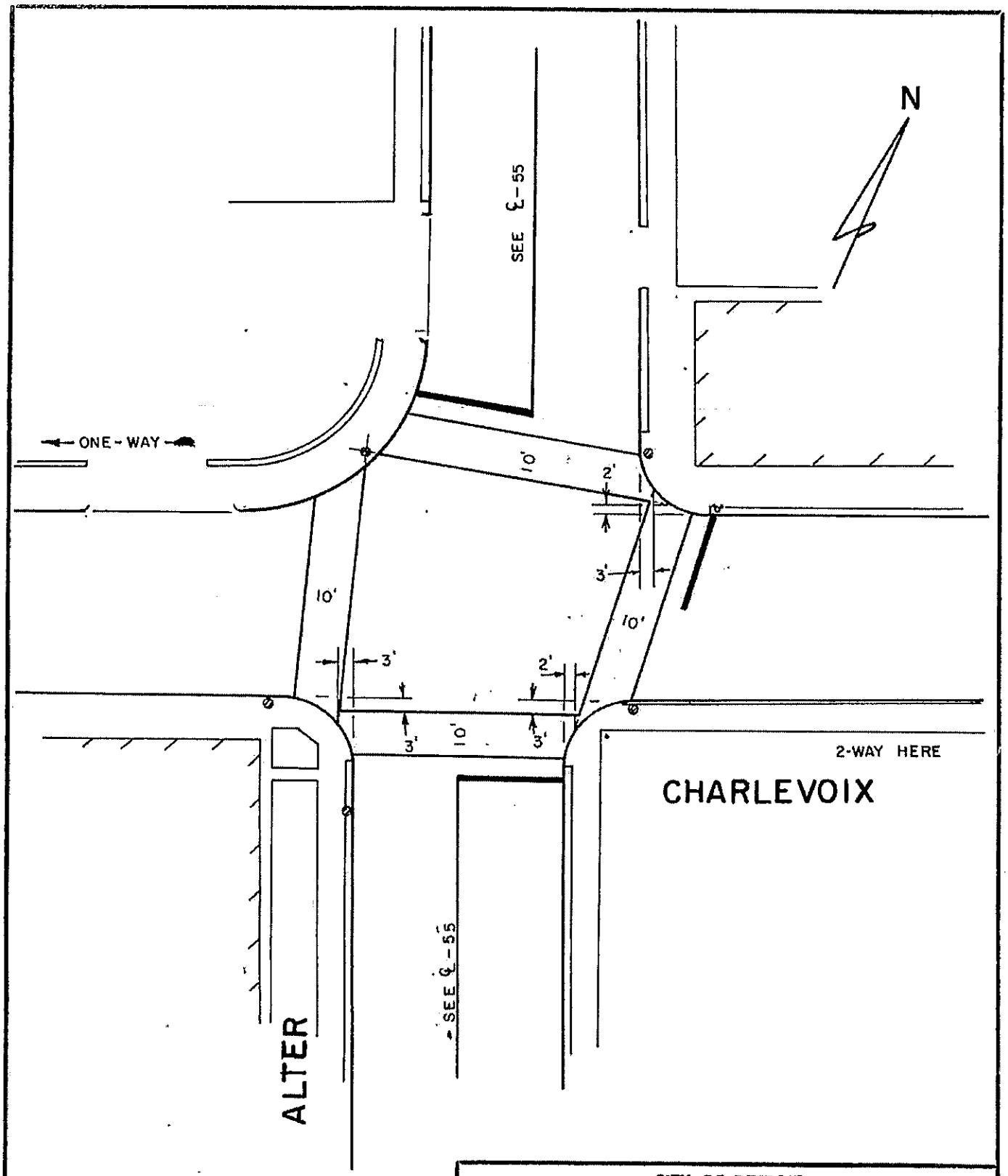

CITY OF DETROIT
DEPARTMENT OF STREETS AND TRAFFIC

ALTER-CHARLEVOIX

DRAWN HD
APPROVED
CHECKED
SCALE 1" = 30'
DATE 8-21-69

NO. E-123

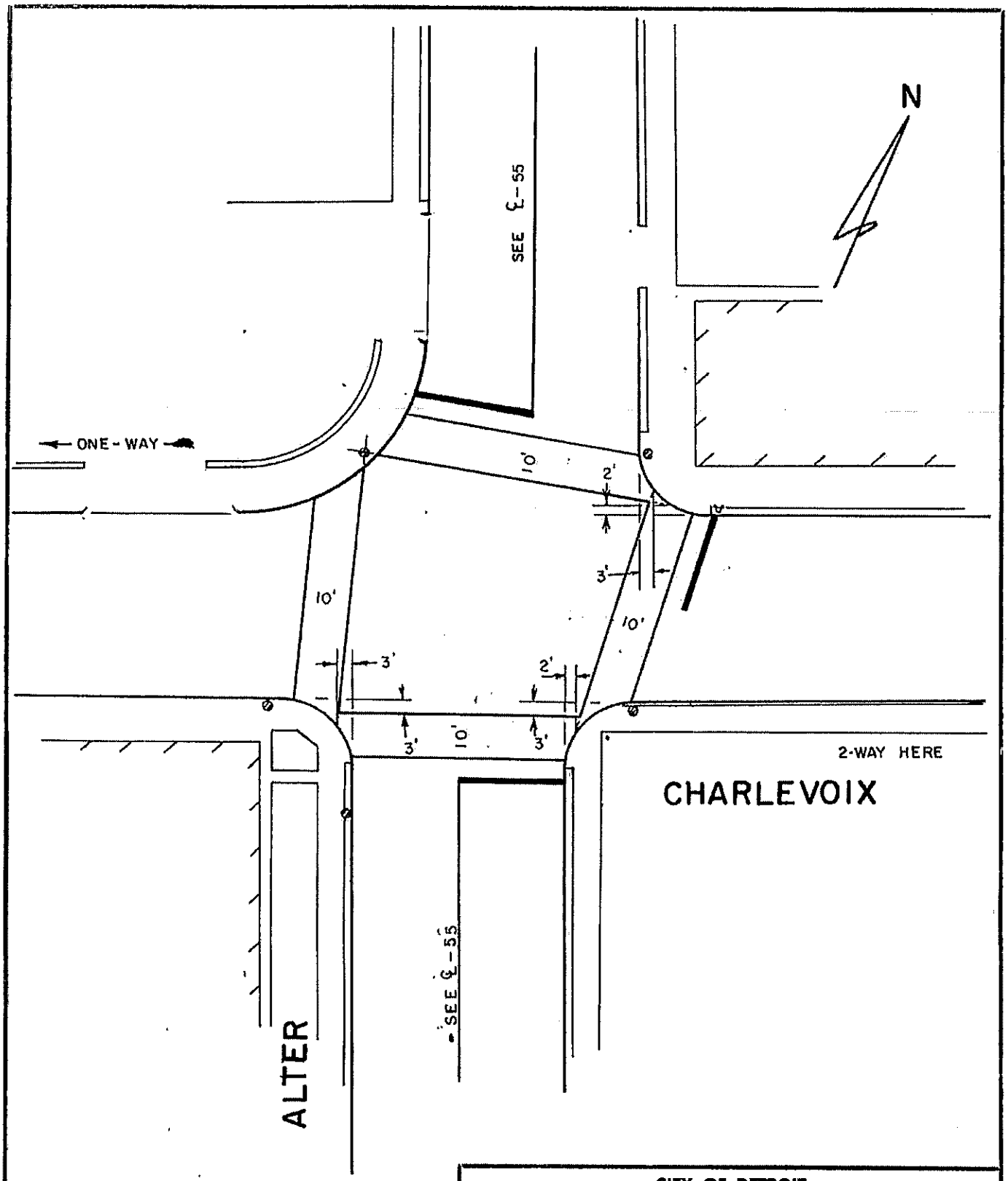

CITY OF DETROIT
DEPARTMENT OF STREETS AND TRAFFIC

ALTER-CHARLEVOIX

DRAWN HD APPROVED	CHECKED SCALE 1" = 30' DATE 8-21-69	NO. E-123

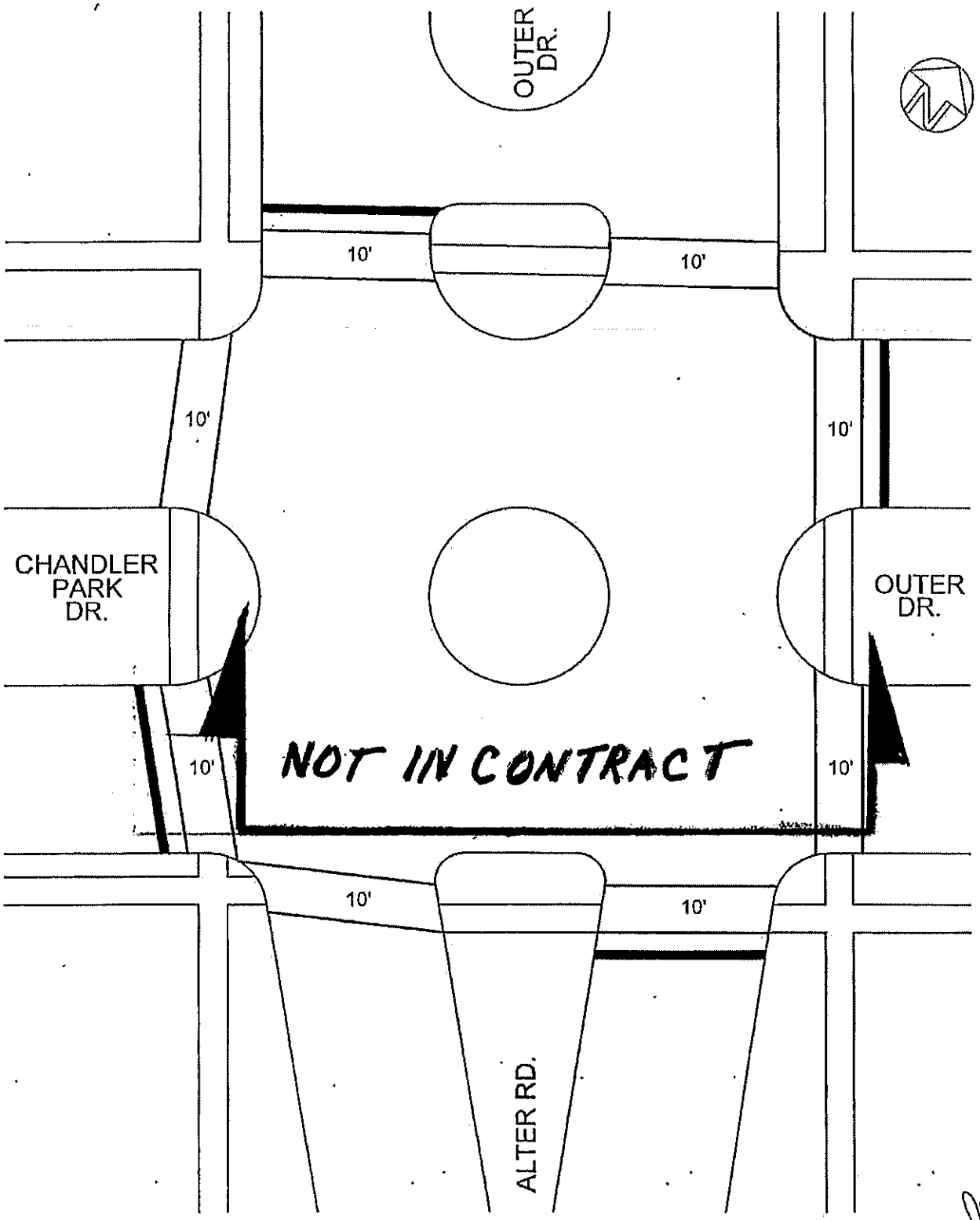

CITY OF DETROIT
DEPARTMENT OF PUBLIC WORKS
TRAFFIC ENGINEERING DIVISION

ALTER RD.-CHANDLER PK. DR.

OUTER DR.

DRAWN : A.D. BOLTON
SCALE : 1" = 30'
DATE : 05 - 20 - 2014

NO. E-259

I:\Traffic Engineering Operations\Pavement Drawings\CAD Format\Area E\E-259.dwg, 6/13/2014 2:47:26 PM, Canon iR2525/2530 UFRII LT, 1:361.8

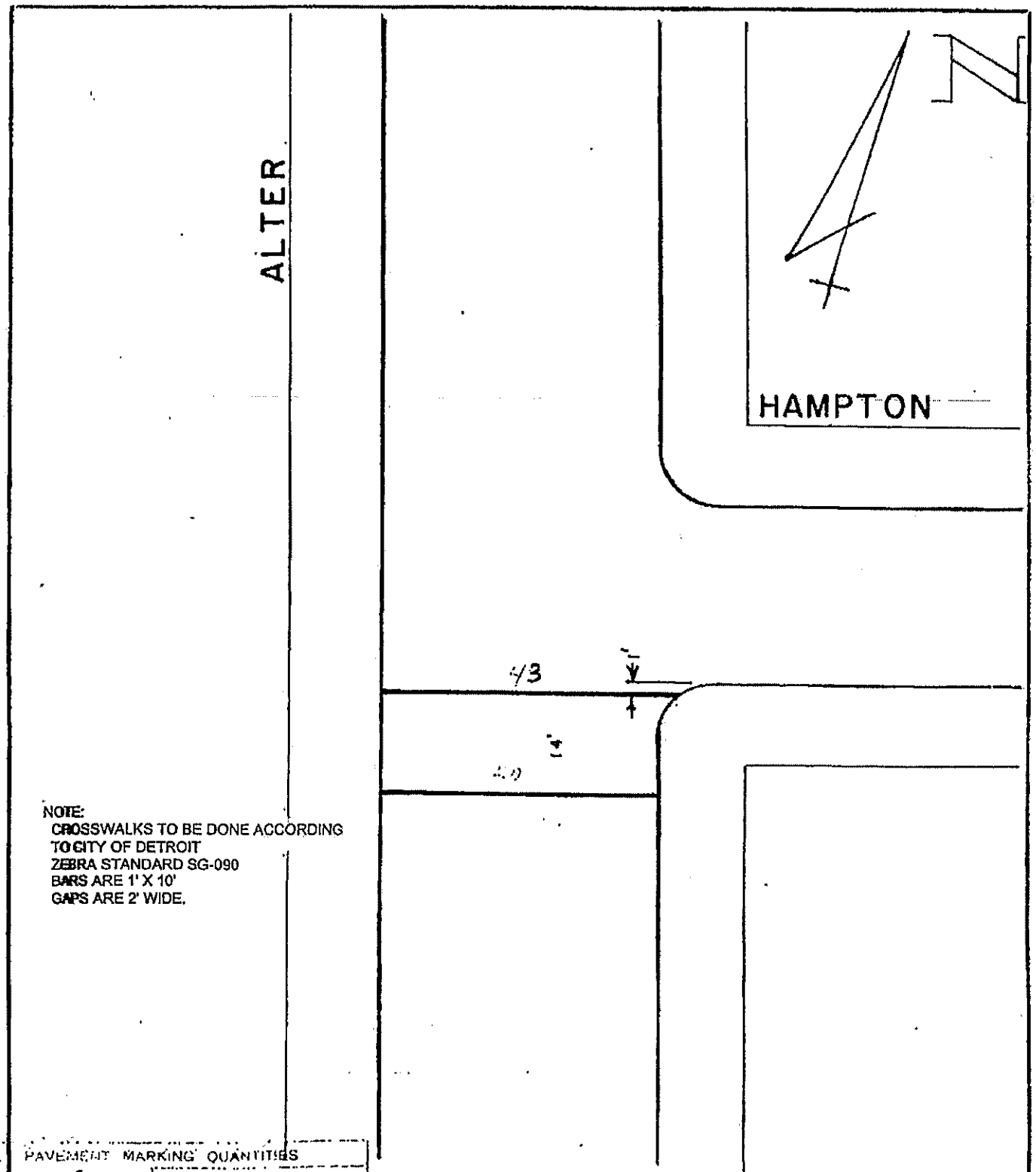

NOTE:
CROSSWALKS TO BE DONE ACCORDING
TO CITY OF DETROIT
ZEBRA STANDARD SG-090
BARS ARE 1' X 10'
GAPS ARE 2' WIDE.

PAVEMENT MARKING QUANTITIES			
DATE 4-2-81 BY: EL	LINEAL FEET		
	CITY	STATE	COUNTY
CENTER LINES (4"W)			
STOP LINES (6"W)			
X WALK LINES (6"W)	72		
LANE LINES (4"W)			
TOTAL	72		
ISLANDS			
SYMBOLS (W)			

CITY OF DETROIT
DEPARTMENT OF STREETS AND TRAFFIC
SCHOOL CROSSWALK PAINTINGS

ALTER – HAMPTON

DRAWN B. R.
APPROVED
CHECKED
SCALE 1" = 20'
DATE 9 – 23 – 65

NO. II – 32

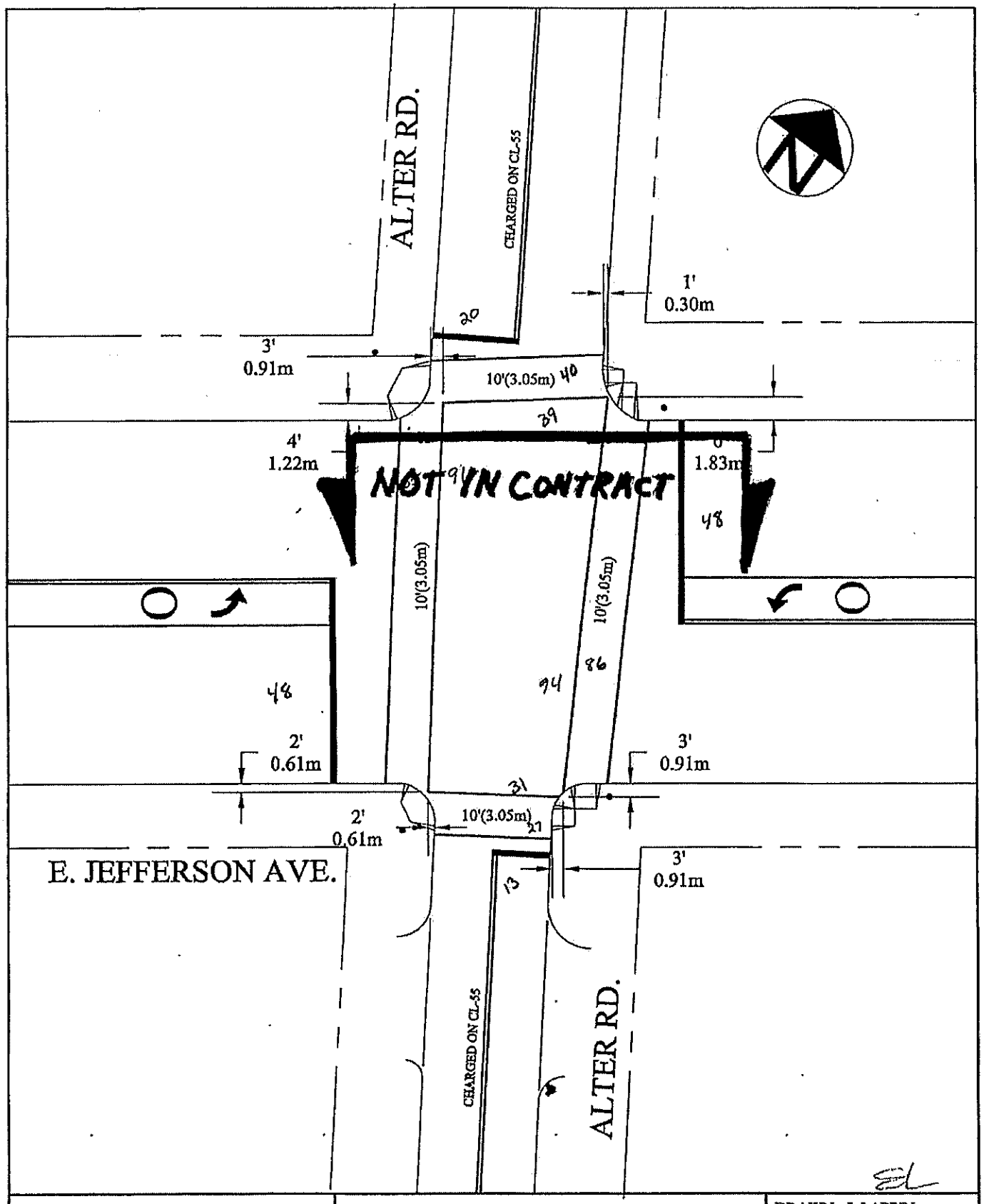

CITY OF DETROIT DEPARTMENT OF PUBLIC WORKS TRAFFIC ENGINEERING DIVISION	ALTER RD. E. JEFFERSON AVE.	DRAWN : J. LAPPIN SCALE : 1" = 30' DATE : 01 - 12 - 2000 NO. JE-14900

CADIEUX

CHANDLER PARK
TO
MORANG

TRAFFIC DATA:

PRESENT: 10,520
FUTURE: 11,572
COMMERCIAL: 3%
POSTED SPEED: 30 MPH

TYPE OF PAVEMENT	ASPHALT OVER CONCRETE	
LENGTH		4,140 FEET
PAVEMENT WIDTH		46 - 66 FEET (VARIES)

SCHEDULE OF ITEMS

LOCATION: **CADIEUX: CHANDLER PARK TO MORANG**

LENGTH: **4140 FT** **WIDTH: 46 - 66 FT VARIES**

WORK TYPE: Cold Milling, HMA Resurfacing, Concrete Curb, Sidewalk, Driveway Approach, Drainage Improvements and Misc Construction

Description of Work	Estimated Quantity	Item Unit
Mobilization, Max. ____	0.15	LS
**Sidewalk, Rem	823	Syd
**Curb, Rem, Modified	618	Ft
Pavt, Rem	0	Syd
Excavation, Earth, Modified	5	Cyd
Granular Material, Cl II	5	Cyd
Aggregate Base, 4 inch	50	Syd
Sewer Cleanout, Modified	220	Ft
Dr Structure Cover, Modified	11809	Lb
Catch Basin A, Modified	1	Ea
Catch Basin BT, Modified	1	Ea
Dr Structure Cleaning, Modified	22	Ea
Dr Structure Cover, Adj, Case 1, Modified	43	Ea
Dr Structure Cover, Adj, Case 2, Modified	4	Ea
Reconstructing Dr Structure, Case 1, Modified	1	Ea
Reconstructing Dr Structure, Case 2, Modified	1	Ea
Pavt for Butt Joints, Rem	666	Syd
Hand Patching	5	Ton
HMA, 4E3	2375	Ton
HMA, 5E3	1781	Ton
Cold Milling HMA Surface, Modified	21591	Syd
HMA Surface, Rem	1324	Syd
Conditioning Existing Pavement, Modified	291	Ton
HMA Approach, Modified	255	Ton
HMA Shoulder, Modified	11	Ton
Pavt, Cleaning	0.15	LS
Conc Pavt , Misc, Nonreinf, 8 inch, Modified	0	Syd
Pavt Repr, Nonreinf Conc, 10 inch, Modified	50	Syd
**Curb, Conc, Detail CD, Modified	618	Ft

** Estimated quantities for use at the discretion of the Engineer and subject to the Bureau Chief's or Head Engineer's approval during construction.

LOCATION: CADIEUX: CHANDLER PARK TO MORANG

LENGTH: 4140 FT **WIDTH:** 46 - 66 FT VARIES

WORK TYPE: Cold Milling, HMA Resurfacing, Concrete Curb, Sidewalk, Driveway Approaches, Drainage Improvements and Misc Construction

Description of Work	Estimated Quantity	Item Unit
Pavt Repr, Rem, Modified	50	Syd
Sidewalk, Conc Repl, 4 inch with Tree Roots, Modified	504	Sft
Sidewalk, Conc Repl, 6 inch with Tree Roots, Modified	0	Sft
Detectable Warning Surface Tiles, Modified	205	Ft
Sidewalk Ramp, ADA, Modified	4175	Sft
Sidewalk, Conc, 4 inch, Modified	2112	Sft
**Sidewalk, Conc, 6 inch, Modified	618	Sft
Pavt Mrkg, Ovly Cold Plastic, 18 inch, Stop Bar	58	Ft
Pavt Mrkg, Ovly Cold Plastic, 6 inch, Crosswalk	261	Ft
Pavt Mrkg, Ovly Cold Plastic, 12 inch, Crosswalk	0	Ft
Pavt Mrkg, Ovly Cold Plastic, Only	9	Ea
Pavt Mrkg, Ovly Cold Plastic, Thru Arrow Sym	1	Ea
Pavt Mrkg, Ovly Cold Plastic, Thru and Rt Turn Arrow Sym	1	Ea
Pavt Mrkg, Ovly Cold Plastic, Rt Turn Arrow Sym	2	Ea
Pavt Mrkg, Ovly Cold Plastic, Lt Turn Arrow Sym	6	Ea
Pavt Mrkg, Sprayable Thermopl, 4 inch, White	820	Ft
Pavt Mrkg, Sprayable Thermopl, 4 inch, Yellow	7170	Ft
Pavt Mrkg, Thermopl, 6 inch, Crosswalk	380	Ft
Pavt Mrkg, Sprayable Thermopl, 12 inch, Crosswalk	820	Ft
Pavt Mrkg, Thermopl, 18 inch, Stop Bar	294	Ft
Pavt Mrkg, Modified Urethane, 6 inch Cross Hatching, Yellow	448	Ft
Barricade, Type III, High Intensity, Double Sided, Lighted, Furn	4	Ea
Barricade, Type III, High Intensity, Double Sided, Lighted, Oper	4	Ea
Traffic Regulator Control	0.15	LS
Lighted Arrow, Type C, Furn	2	Ea
Lighted Arrow, Type C, Oper	2	Ea
Minor Traf Devices	0.15	LS
Plastic Drum, High Intensity, Furn	83	Ea
Plastic Drum, High Intensity, Oper	83	Ea
Sign, Type B, Temp, Prismatic, Furn	400	Sft
Sign, Type B, Temp, Prismatic, Oper	400	Sft
Water, Sodding/Seeding	0.3	Unit
Hydroseeding, Modified	0	Syd
Topsoil Surface, Furn, LM, Modified	0	Cyd
Water, Shutoff, Adj, Modified	2	Ea
Recessing for Pavt Mrkg, 6 inch	641	Ft
Recessing for Pavt Mrkg, 12 inch	820	Ft
Recessing for Pavt Mrkg, 18 inch	352	Ft

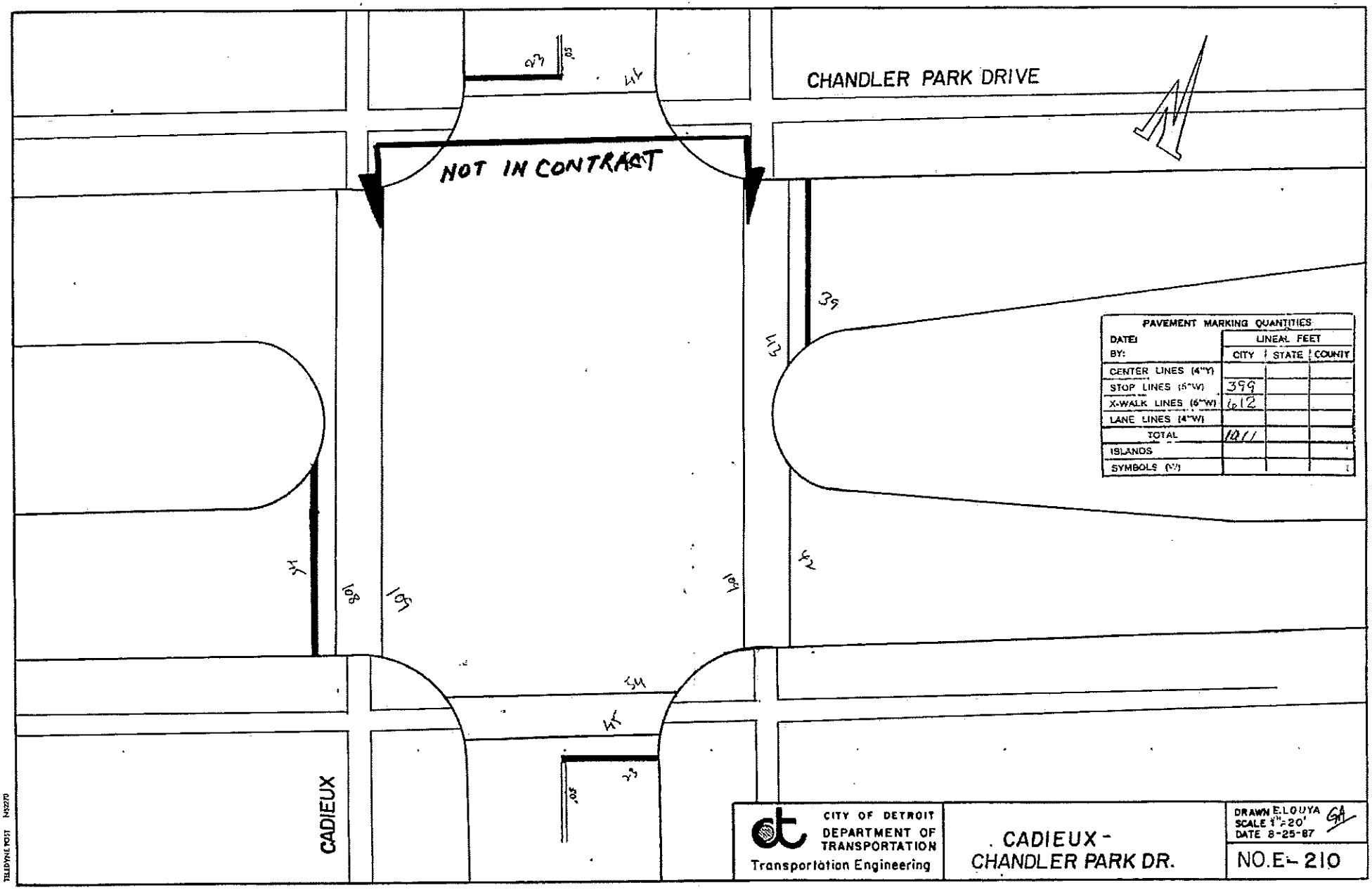

PAVEMENT MARKING QUANTITIES			
DATE:	LINEAL FEET		
BY:	CITY	STATE	COUNTY
CENTER LINES (4"Y)			
STOP LINES (6"W)	399		
X-WALK LINES (6"W)	612		
LANE LINES (4"W)			
TOTAL	1011		
ISLANDS			
SYMBOLS (N/)			

CITY OF DETROIT
DEPARTMENT OF TRANSPORTATION
Transportation Engineering

CADIEUX - CHANDLER PARK DR.

DRAWN E. LOUYA
SCALE 1"=20'
DATE 8-25-87

NO. E-210

TELEDYNE POST 142270

CADIEUX AVE.

FROM	TO	LENGTH ACTUAL	LENGTH CHARGE CL	LENGTH CHARGE LL	SKETCH	WIDTH
MACK	CORNWALL	3,158	6,316	—	W / E	46 FT
CORNWALL	E. WARREN	523	1,322	460	SEE DRW'G. E-39a	VAR.
E. WARREN	FRANKFORT	600	1,608	500	SEE DRW'G. E-39a	VAR.
℄ CHANDLER PARK TO 550 FT. S. OF HARPER		2,652	5,304	—	W / E	46 FT
550 FT. S. OF HARPER	HARPER	550	1,537	280	SEE DRW'G. E-50	VAR.
HARPER	E. FORD FWY. S. SER. DR. & ON RAMP	128	210	263	SEE DRW'G. E-50	VAR.
E. FORD FWY. S. SER. DR. & ON RAMP	E. FORD FWY. N. SER. DR.	250	454	255	SEE DRW'G. E-104	50 FT

NOT IN CONTRACT

CITY OF DETROIT
DEPARTMENT OF TRANSPORTATION
Transportation Engineering

CADIEUX LANING
MACK - MORANG

DRAWN R ROSIK
SCALE N A
DATE 7-23-91

NO. CL-60

SHEET 1 OF 2

BRUNING 76677 FORM # 1260

CADIEUX AVE.

FROM	TO	LENGTH ACTUAL	LENGTH CHARGE CL	LENGTH CHARGE LL	SKETCH	WIDTH
E. FORD FWY. N. SER. DR.	136 FT. N. OF E. FORD FWY. N. SER. DR.	136	265	90	SEE DRW'G. E-104	46 FT
136 FT. N. OF E. FORD FWY. N. SER. DR.	MORANG	1,332	2,664	—	W E	46 FT

CITY OF DETROIT
DEPARTMENT OF TRANSPORTATION
Transportation Engineering

CADIEUX LANING
MACK - MORANG

DRAWN R ROSIK
SCALE N A
DATE 7-23-91

NO. CL-60

SHEET 2 OF 2

BRUNING 76677 FORM X 1260

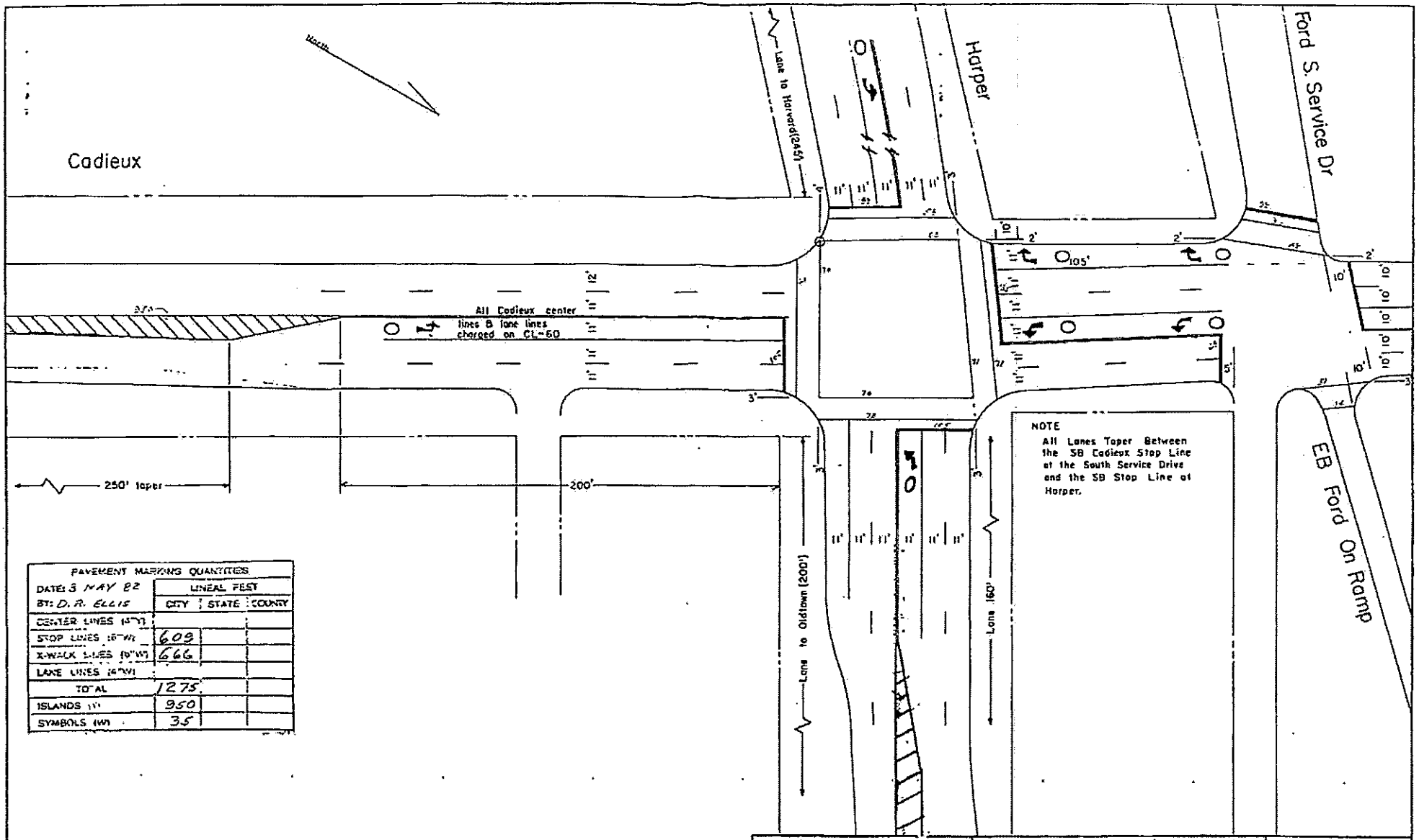

PAVEMENT MARKING QUANTITIES			
DATE: 3 MAY 82	LINEAL FEET		
BY: D. R. ELLIS	CITY	STATE	COUNTY
CENTER LINES (4")			
STOP LINES (18")	609		
X-WALK LINES (10")	666		
LANE LINES (4")			
TOTAL	1275		
ISLANDS (1")	950		
SYMBOLS (W)	35		

REV 13 DEC 96 EL
Rev. 28 April 82 D.R.E.
Revised 2-26-1979 Add Symbol SB
Revised 11 April 1978.
FAUS Project M2000 (033)

CITY OF DETROIT
DEPARTMENT OF TRANSPORTATION
PLANNING & TRAFFIC ENGINEERING

Codieux – Harper

DRAWN T D Mullin
SCALE 1" = 40'
DATE 6 October 1976

NO. E-50

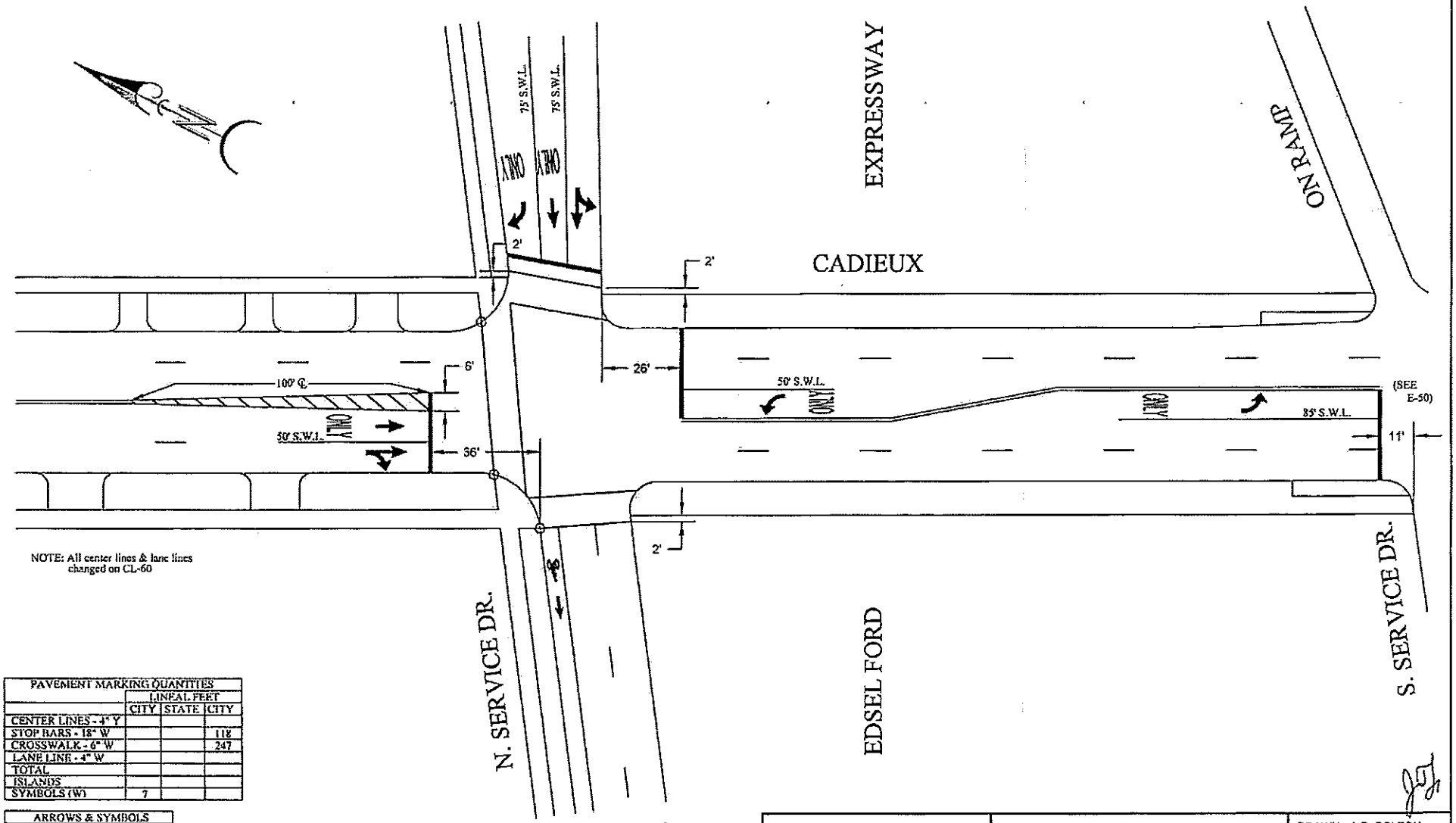

NOTE: All center lines & lane lines changed on CL-60

PAVEMENT MARKING QUANTITIES			
	LINEAL FEET		
	CITY	STATE	CITY
CENTER LINES - 4" Y			
STOP BARS - 18" W			118
CROSSWALK - 6" W			247
LANE LINE - 4" W			
TOTAL			
ISLANDS			
SYMBOLS (W)	7		

ARROWS & SYMBOLS	
THRU ARROWS	2
LEFT TURN ARROWS	2
LEFT & THRU ARROW	1
RIGHT & THRU ARROW	1
ONLY SYMBOLS	4

CITY OF DETROIT
DEPARTMENT OF PUBLIC WORKS
TRAFFIC ENGINEERING DIVISION

CADIEUX
EDSEL FORD EXPRESSWAY

DRAWN : A.D. BOLTON
SCALE : 1" = 30'
DATE : 10-15-2014

NO. E-104

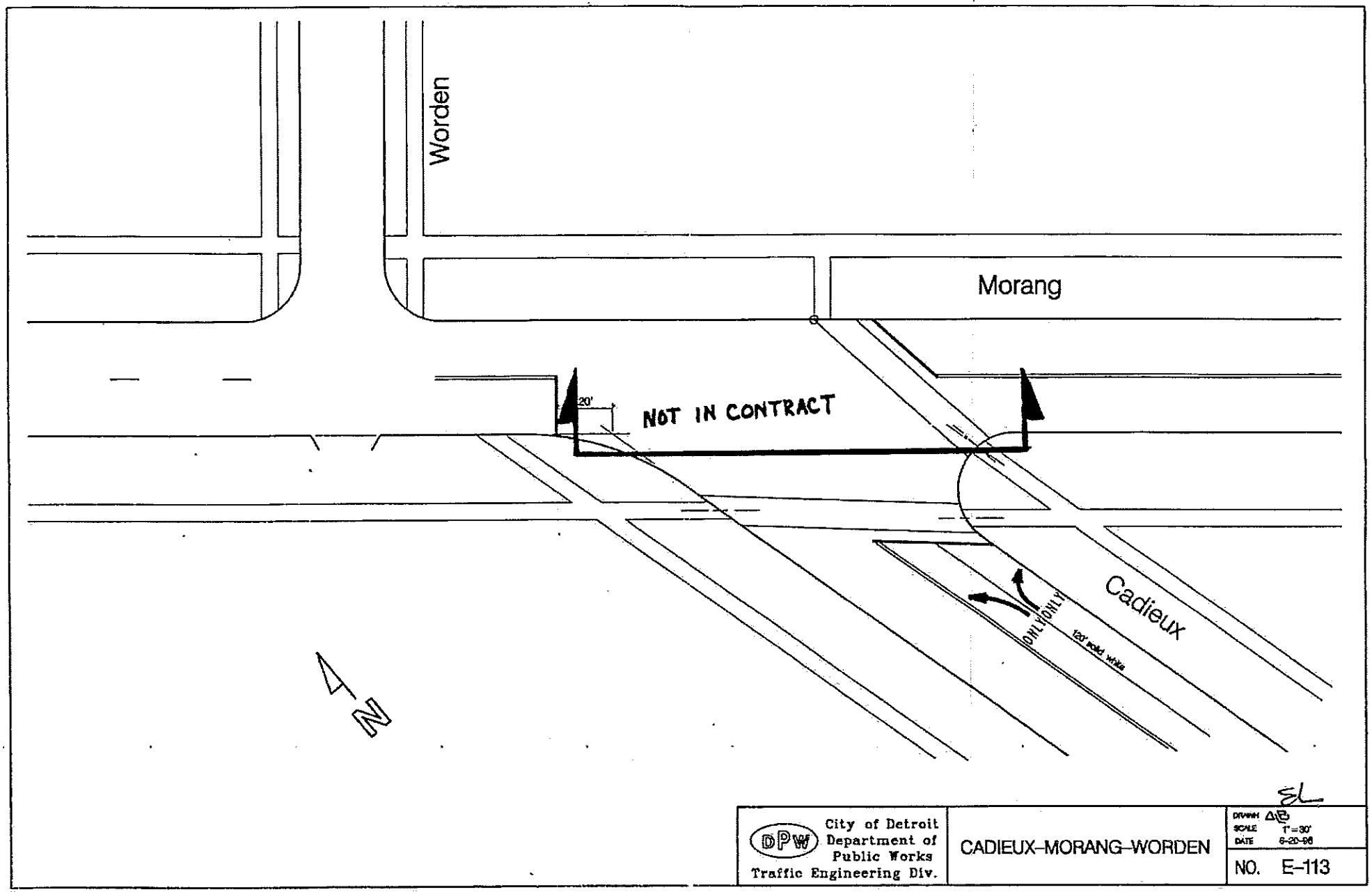

City of Detroit Department of Public Works Traffic Engineering Div.	CADIEUX–MORANG–WORDEN	DRAWN AB SCALE 1" = 30' DATE 6-20-96 NO. E-113

MACK

CHRYSLER FWY
TO
RIOPELLE

TRAFFIC DATA:

PRESENT: 14,634
FUTURE: 16,097
COMMERCIAL: 3%
POSTED SPEED: 30 MPH

TYPE OF PAVEMENT	ASPHALT OVER CONCRETE	
LENGTH		1,154 FEET
PAVEMENT WIDTH		66 FEET

SCHEDULE OF ITEMS

LOCATION: **MACK: CHRYSLER FWY TO RIOPELLE**

LENGTH: **1154 FT** **WIDTH: 66 FT**

WORK TYPE: Cold Milling, HMA Resurfacing, Concrete Curb, Sidewalk, Driveway Approach, Drainage Improvements and Misc Construction

Description of Work	Estimated Quantity	Item Unit
Mobilization, Max.	0.1	LS
**Sidewalk, Rem	604	Syd
**Curb, Rem, Modified	686	Ft
Pavt, Rem	117	Syd
Excavation, Earth, Modified	5	Cyd
Granular Material, Cl II	5	Cyd
Aggregate Base, 4 inch	0	Syd
Sewer Cleanout, Modified	260	Ft
Dr Structure Cover, Modified	11568	Lb
Catch Basin A, Modified	1	Ea
Catch Basin BT, Modified	1	Ea
Dr Structure Cleaning, Modified	26	Ea
Dr Structure Cover, Adj, Case 1, Modified	40	Ea
Dr Structure Cover, Adj, Case 2, Modified	6	Ea
Reconstructing Dr Structure, Case 1, Modified	1	Ea
Reconstructing Dr Structure, Case 2, Modified	1	Ea
Pavt for Butt Joints, Rem	176	Syd
Hand Patching	5	Ton
HMA, 4E3	931	Ton
HMA, 5E3	698	Ton
Cold Milling HMA Surface, Modified	8463	Syd
HMA Surface, Rem	1098	Syd
Conditioning Existing Pavement, Modified	114	Ton
HMA Approach, Modified	211	Ton
HMA Shoulder, Modified	0	Ton
Pavt, Cleaning	0.1	LS
Conc Pavt , Misc, Nonreinf, 8 inch, Modified	117	Syd
Pavt Repr, Nonreinf Conc, 10 inch, Modified	0	Syd
**Curb, Conc, Detail CD, Modified	686	Ft

** Estimated quantities for use at the discretion of the Engineer and subject to the Bureau Chief's or Head Engineer's approval during construction.

LOCATION: **MACK: CHRYSLER FWY TO RIOPELLE**

LENGTH: **1154 FT** **WIDTH: 66 FT**

WORK TYPE: Cold Milling, HMA Resurfacing, Concrete Curb, Sidewalk, Driveway Approaches, Drainage Improvements and Misc Construction

Description of Work	Estimated Quantity	Item Unit
Pavt Repr, Rem, Modified	0	Syd
Sidewalk, Conc Repl, 4 inch with Tree Roots, Modified	0	Sft
Sidewalk, Conc Repl, 6 inch with Tree Roots, Modified	0	Sft
Detectable Warning Surface Tiles, Modified	120	Ft
Sidewalk Ramp, ADA, Modified	1560	Sft
Sidewalk, Conc, 4 inch, Modified	3207	Sft
**Sidewalk, Conc, 6 inch, Modified	672	Sft
Pavt Mrkg, Ovly Cold Plastic, 18 inch, Stop Bar	0	Ft
Pavt Mrkg, Ovly Cold Plastic, 6 inch, Crosswalk	0	Ft
Pavt Mrkg, Ovly Cold Plastic, 12 inch, Crosswalk	0	Ft
Pavt Mrkg, Ovly Cold Plastic, Only	1	Ea
Pavt Mrkg, Ovly Cold Plastic, Thru Arrow Sym	0	Ea
Pavt Mrkg, Ovly Cold Plastic, Thru and Rt Turn Arrow Sym	0	Ea
Pavt Mrkg, Ovly Cold Plastic, Rt Turn Arrow Sym	1	Ea
Pavt Mrkg, Ovly Cold Plastic, Lt Turn Arrow Sym	0	Ea
Pavt Mrkg, Sprayable Thermopl, 4 inch, White	840	Ft
Pavt Mrkg, Sprayable Thermopl, 4 inch, Yellow	0	Ft
Pavt Mrkg, Thermopl, 6 inch, Crosswalk	682	Ft
Pavt Mrkg, Sprayable Thermopl, 12 inch, Crosswalk	0	Ft
Pavt Mrkg, Thermopl, 18 inch, Stop Bar	157	Ft
Pavt Mrkg, Modified Urethane, 6 inch Cross Hatching, Yellow	0	Ft
Barricade, Type III, High Intensity, Double Sided, Lighted, Furn	4	Ea
Barricade, Type III, High Intensity, Double Sided, Lighted, Oper	4	Ea
Traffic Regulator Control	0.1	LS
Lighted Arrow, Type C, Furn	2	Ea
Lighted Arrow, Type C, Oper	2	Ea
Minor Traf Devices	0.1	LS
Plastic Drum, High Intensity, Furn	23	Ea
Plastic Drum, High Intensity, Oper	23	Ea
Sign, Type B, Temp, Prismatic, Furn	200	Sft
Sign, Type B, Temp, Prismatic, Oper	200	Sft
Water, Sodding/Seeding	0.2	Unit
Hydroseeding, Modified	0	Syd
Topsoil Surface, Furn, LM, Modified	0	Cyd
Water, Shutoff, Adj, Modified	0	Ea
Recessing for Pavt Mrkg, 6 inch	682	Ft
Recessing for Pavt Mrkg, 12 inch	0	Ft
Recessing for Pavt Mrkg, 18 inch	157	Ft

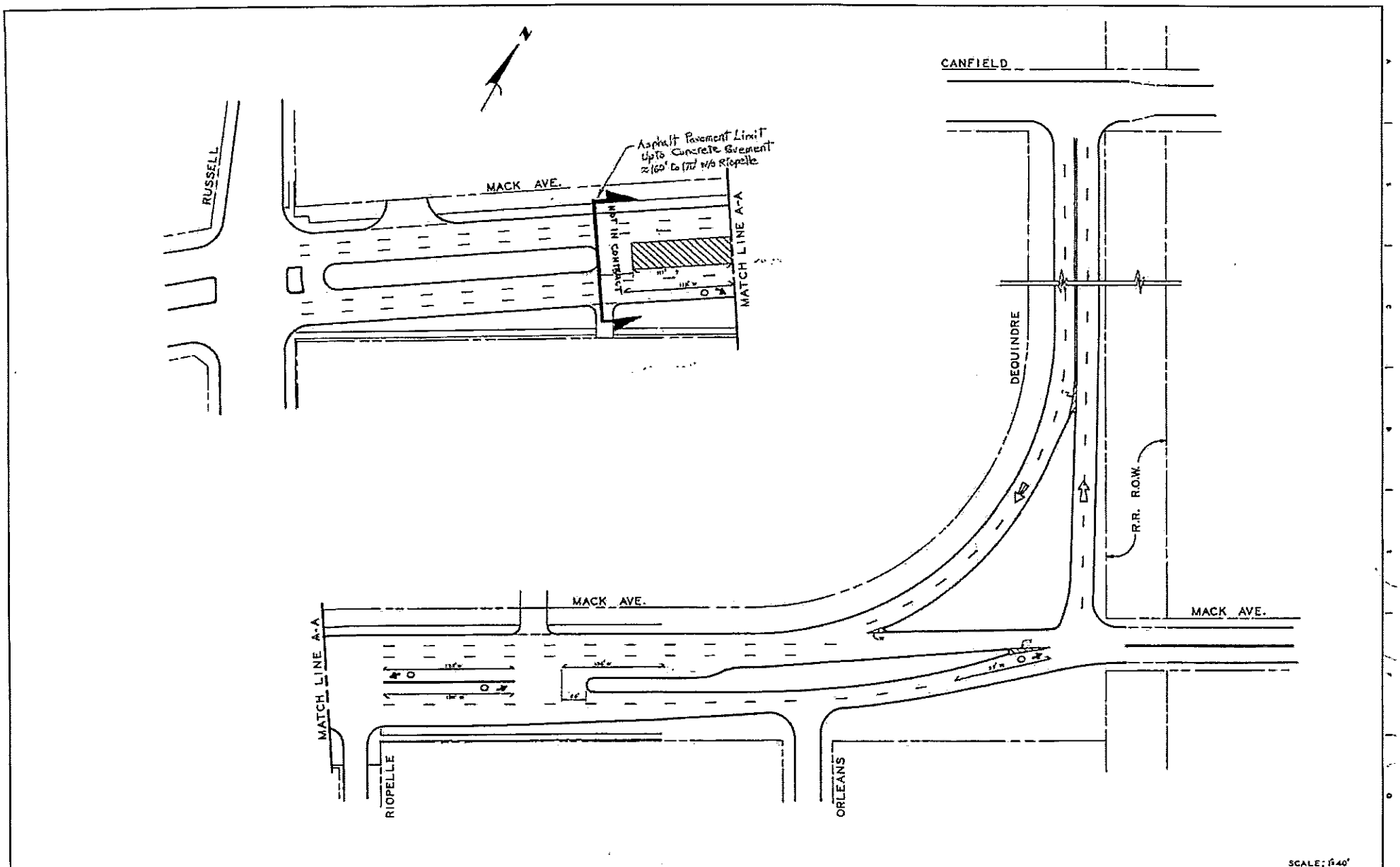

SCALE: 1"=40'

DESIGNED BY		APPROVED	
DRAWN BY	R ROSIK		
TRACED BY		ASSIGNMENT NO.	90-14-08
CHECKED BY			

REVISIONS LOCATED ON COORDINATES ON SHEET

CITY OF DETROIT
DEPARTMENT OF TRANSPORTATION
TRANSPORTATION ENGINEERING

MACK AVE. - DEQUINDRE LANING
FROM (CANFIELD - MACK)
RUSSELL TO CANFIELD

SHEET 2 OF 13 SHEETS
CONTRACT NO. PW 6691
DRWG NO. L-34
DATE MAY 3, 1990

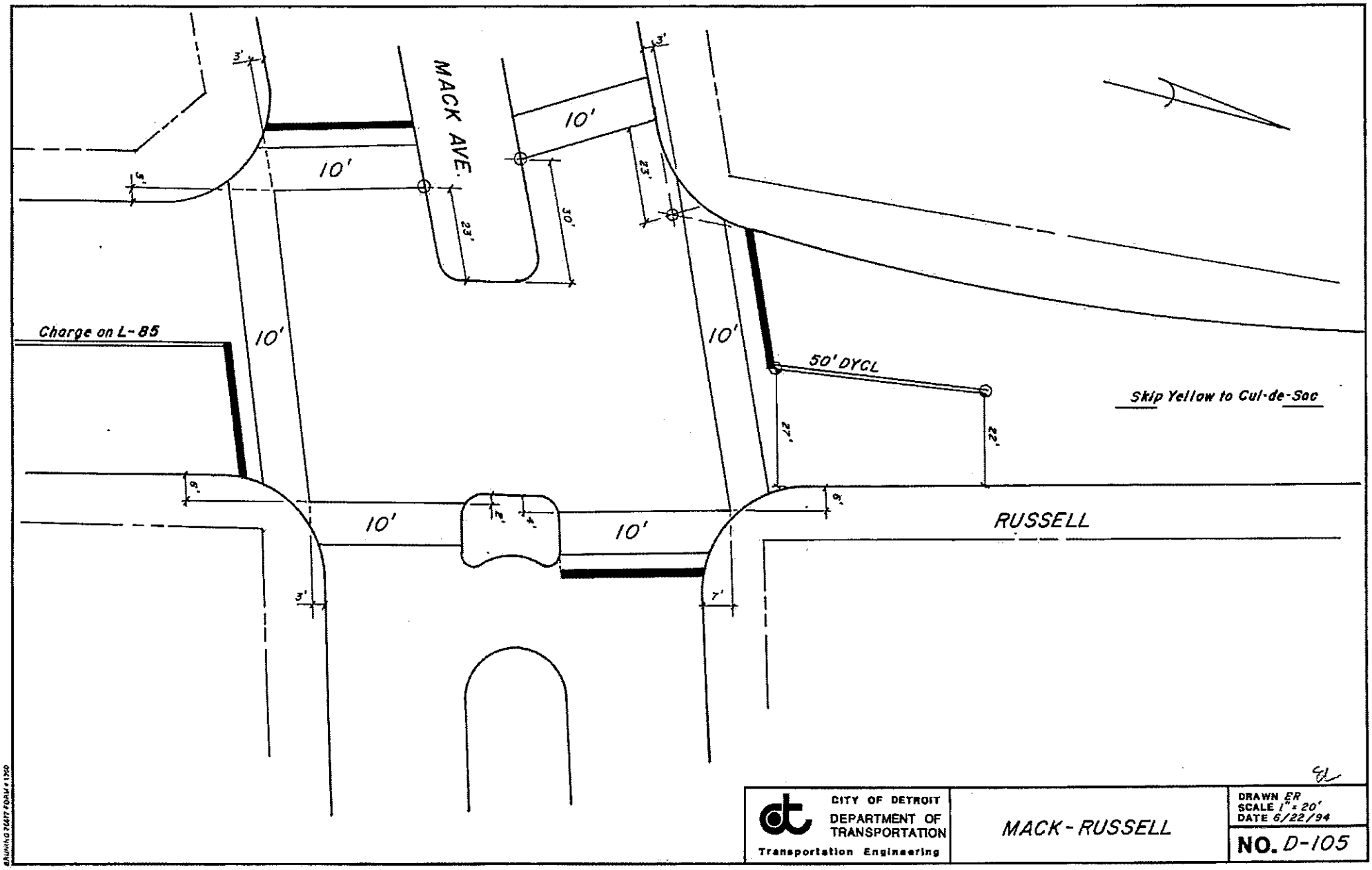
MACK AVE.
10'
10'
10'
10'
10'
10'
10'
3'
3'
5'
23'
30'
23'
Charge on L-85
50' DYCL
Skip Yellow to Cul-de-Sac
27'
22'
6'
6'
2'
4'
3'
7'
RUSSELL
CITY OF DETROIT
DEPARTMENT OF TRANSPORTATION
Transportation Engineering
MACK - RUSSELL
DRAWN ER
SCALE 1" = 20'
DATE 6/22/94
NO. D-105

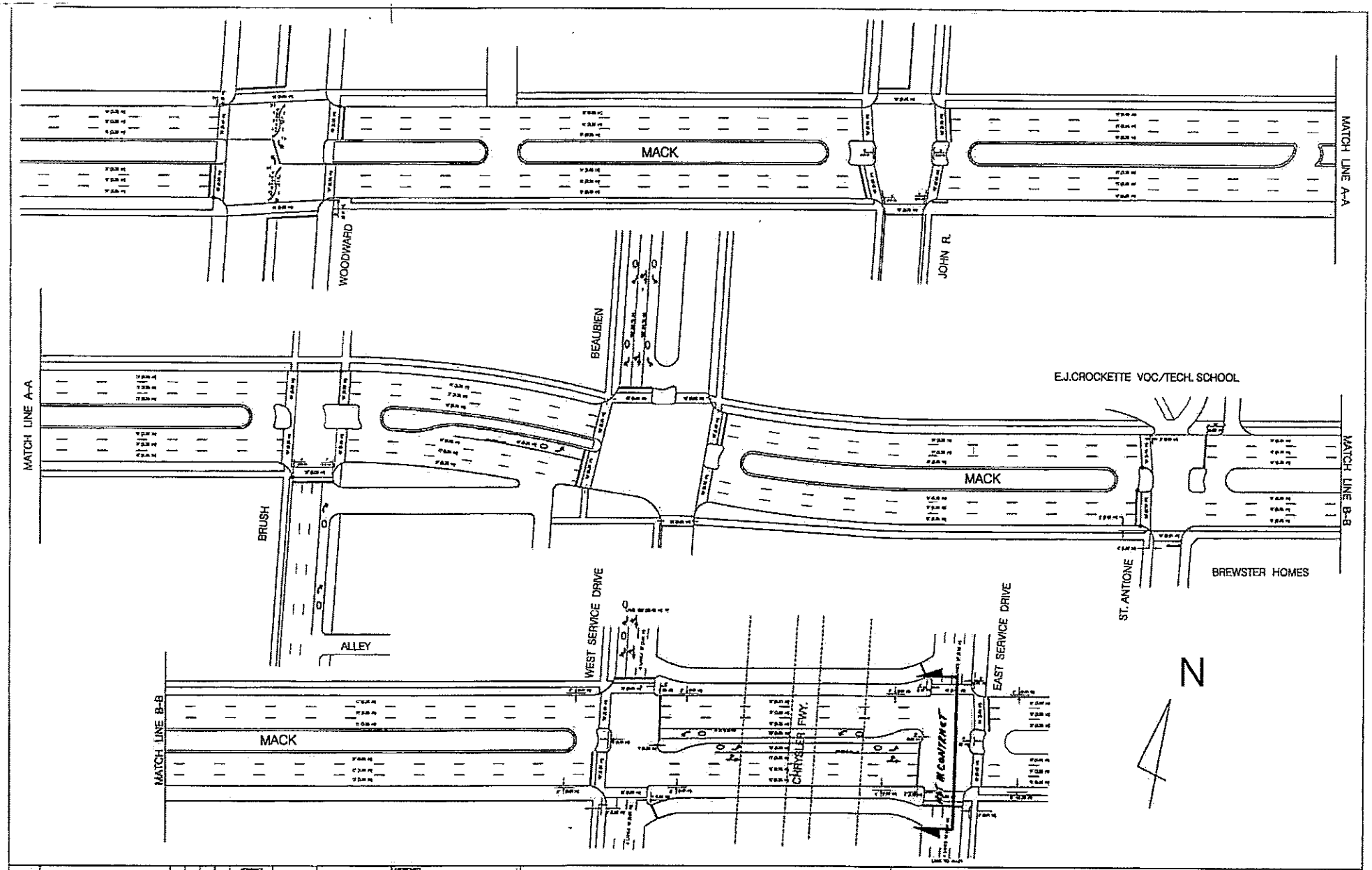

DESCRIPTION REVISIONS	DRAWN BY E. LOUYA	APPROVED	CITY OF DETROIT DEPARTMENT OF PUBLIC WORKS TRAFFIC ENGINEERING DIVISON
	VERIFIED BY J. ROOSE		MACK WOODWARD – CHRYSLER FWY.
	CHECKED BY		SHEET 1 OF 13 SHEETS SCALE 1'=40' DRWG NO. L-34● DATE 01/25/01

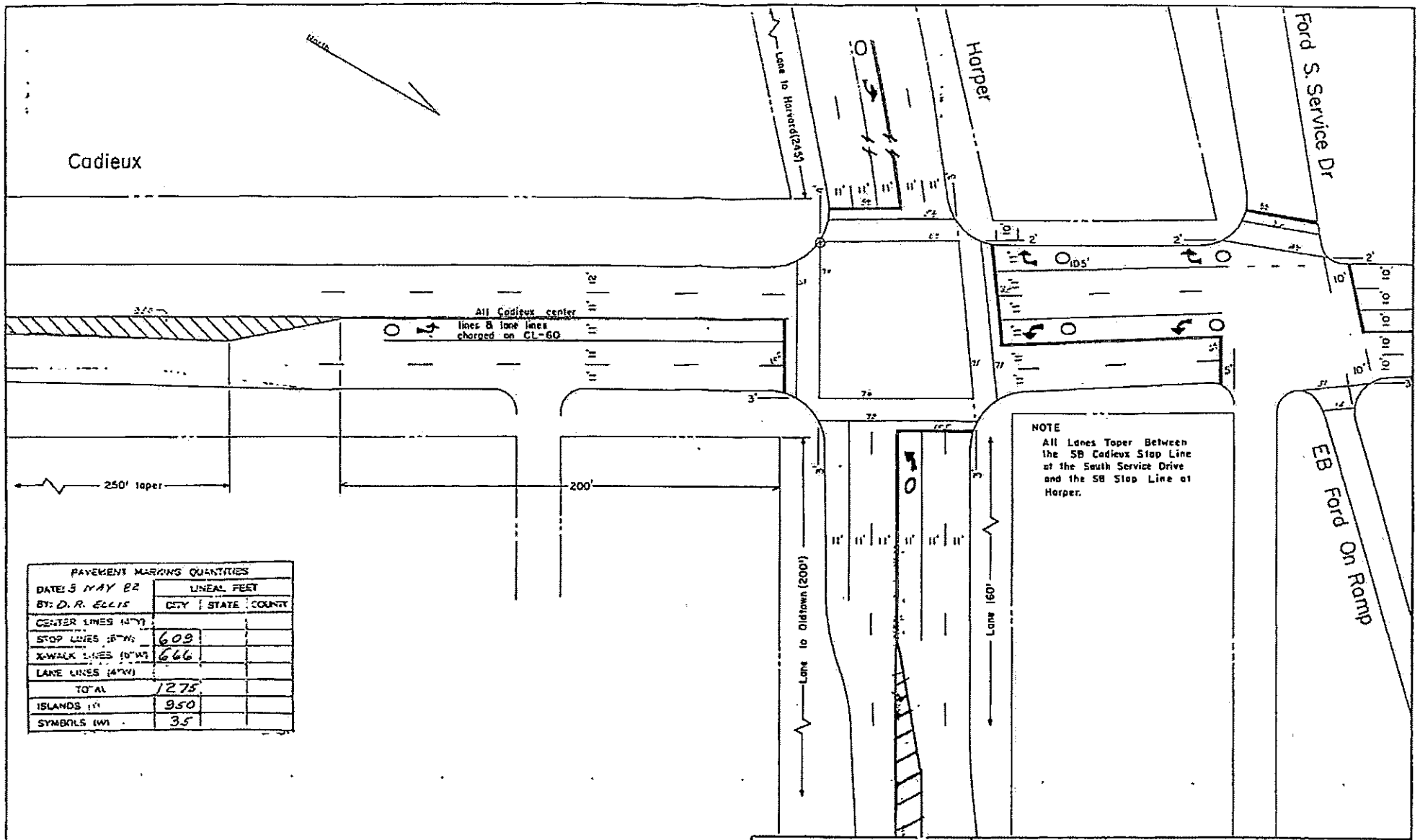

PAVEMENT MARKING QUANTITIES			
DATE: 5 MAY 82	LINEAL FEET		
BY: D. R. ELLIS	CITY	STATE	COUNTY
CENTER LINES (4"W)			
STOP LINES (8"W)	609		
X-WALK LINES (10"W)	666		
LANE LINES (4"W)			
TOTAL	1275		
ISLANDS (1")	950		
SYMBOLS (W)	35		

REV 13 DEC 96 EL.
Rev. 28 April 82 D.R.E.
Revised 2-26-1979 Add Symbol SB
Revised 11 April 1978.
FAUS Project M2000 (033)

CITY OF DETROIT
DEPARTMENT OF TRANSPORTATION
PLANNING & TRAFFIC ENGINEERING

Cadieux – Harper

DRAWN T.D. Mullin
SCALE 1" = 40'
DATE 6 October 1976

NO. E-50

MACK

FROM	TO	LENGTH Actual	LENGTH Charge CL	LENGTH Charge LL	SKETCH	WIDTH
Woodward	Brush	1345'		1345'	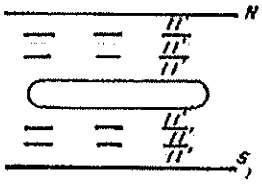	33' Div. N/S
Brush	Beaubien	330'		460'	See D-148	Var.
Beaubien	Chrysler W.S.D.	1145'		1145'	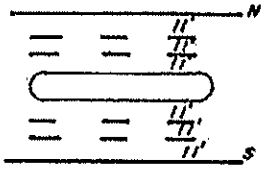	33' Div. N/S
Chrysler W.S.D.	Chrysler E.S.D.	340'		780'	See D-154	90'
Chrysler E.S.D.	Russell	815'		815'	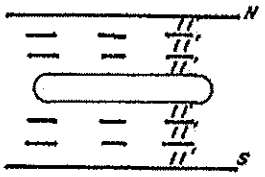	33' Div. N/S
Russell	Dequindre	1230'	260'	1347'	See L-34 Sht. 3of5	Var.

NOT IN CONTRACT

SHT. 1 OF 5

CITY OF DETROIT
DEPARTMENT OF TRANSPORTATION
Transportation Engineering

MACK

DRAWN ER
SCALE NONE
DATE 6/27/94

NO. L-34

BRUNING 76877 FORM # 1260

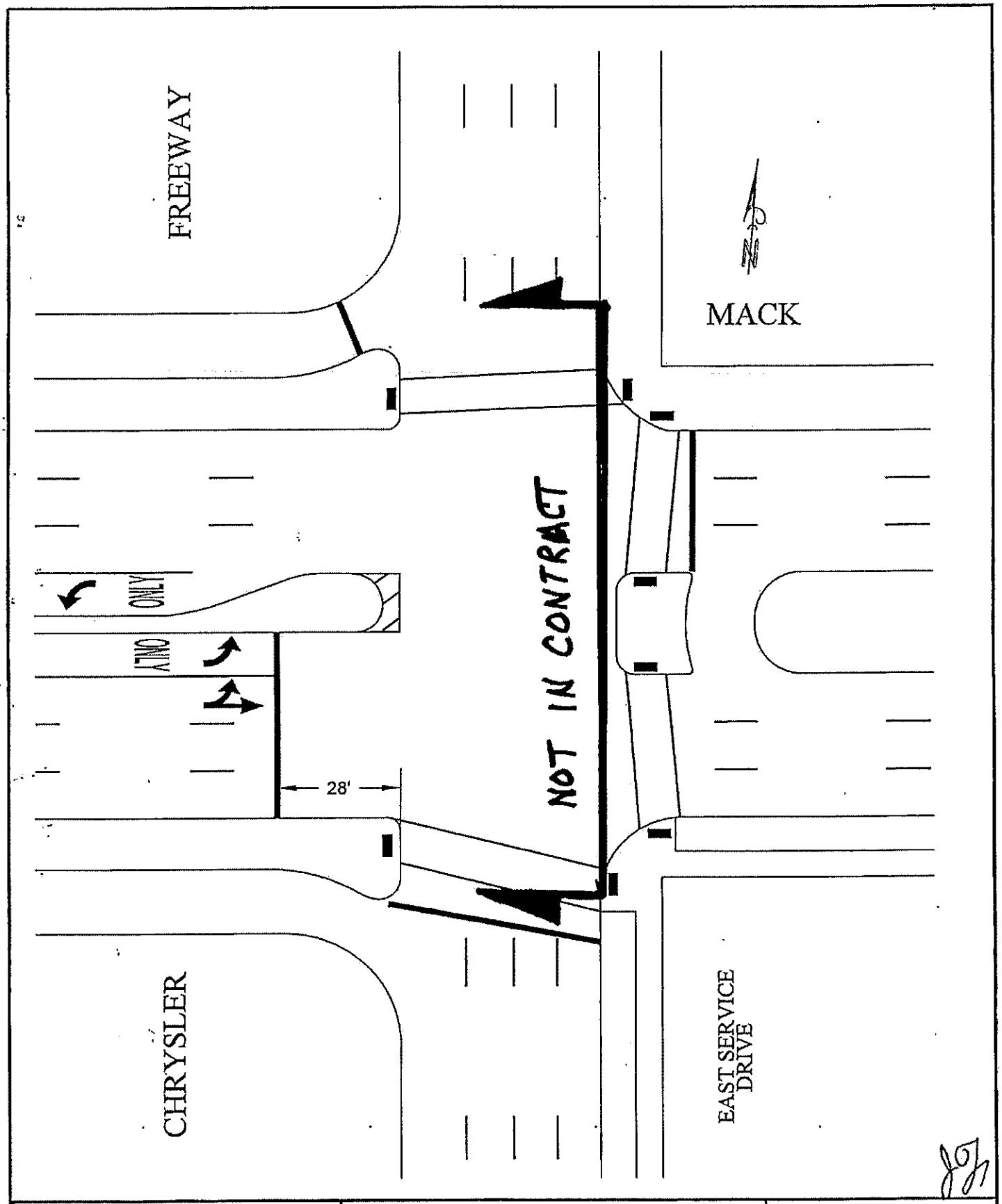

CITY OF DETROIT DEPARTMENT OF PUBLIC WORKS TRAFFIC ENGINEERING DIVISION	EAST SERVICE DRIVE CHRYSLER / MACK	DRAWN : A.D. BOLTON SCALE : 1" = 30' DATE : 07-01-2014 NO. D-154-2

SEVEN MILE

CHRYSLER FWY
TO
CONANT

TRAFFIC DATA:

PRESENT: 16,370
FUTURE: 17,949
COMMERCIAL: 3%
POSTED SPEED: 30 MPH

TYPE OF PAVEMENT	ASPHALT OVER CONCRETE	
LENGTH		5,480 FEET
PAVEMENT WIDTH		46 - 40 FEET (VARIES)

SCHEDULE OF ITEMS

LOCATION: **SEVEN MILE: CHRYSLER FWY TO CONANT**

LENGTH: **5,480 FT** **WIDTH : 46 - 40 FT VARIES**

WORK TYPE: Cold Milling, HMA Resurfacing, Concrete Curb, Sidewalk, Driveway Approach, Drainage Improvements and Misc Construction

Description of Work	Estimated Quantity	Item Unit
Mobilization, Max.	0.2	LS
**Sidewalk, Rem	2985	Syd
**Curb, Rem, Modified	2660	Ft
Pavt, Rem	67	Syd
Excavation, Earth, Modified	10	Cyd
Granular Material, Cl II	10	Cyd
Aggregate Base, 4 inch	160	Syd
Sewer Cleanout, Modified	480	Ft
Dr Structure Cover, Modified	25305	Lb
Catch Basin A, Modified	1	Ea
Catch Basin BT, Modified	1	Ea
Dr Structure Cleaning, Modified	48	Ea
Dr Structure Cover, Adj, Case 1, Modified	91	Ea
Dr Structure Cover, Adj, Case 2, Modified	12	Ea
Reconstructing Dr Structure, Case 1, Modified	1	Ea
Reconstructing Dr Structure, Case 2, Modified	1	Ea
Pavt for Butt Joints, Rem	696	Syd
Hand Patching	5	Ton
HMA, 4E3	2904	Ton
HMA, 5E3	2178	Ton
Cold Milling HMA Surface, Modified	26401	Syd
HMA Surface, Rem	2426	Syd
Conditioning Existing Pavement, Modified	356	Ton
HMA Approach, Modified	467	Ton
HMA Shoulder, Modified	92	Ton
Pavt, Cleaning	0.2	LS
Conc Pavt , Misc, Nonreinf, 8 inch, Modified	67	Syd
Pavt Repr, Nonreinf Conc, 10 inch, Modified	160	Syd
**Curb, Conc, Detail CD, Modified	2660	Ft

** Estimated quantities for use at the discretion of the Engineer and subject to the Bureau Chief's or Head Engineer's approval during construction.

LOCATION: SEVEN MILE: CHRYSLER FWY TO CONANT

LENGTH: 5,480 FT **WIDTH :** 46 - 40 FT VARIES

WORK TYPE: Cold Milling, HMA Resurfacing, Concrete Curb, Sidewalk, Driveway Approaches, Drainage Improvements and Misc Construction

Description of Work	Estimated Quantity	Item Unit
Pavt Repr, Rem, Modified	160	Syd
Sidewalk, Conc Repl, 4 inch with Tree Roots, Modified	1152	Sft
Sidewalk, Conc Repl, 6 inch with Tree Roots, Modified	1080	Sft
Detectable Warning Surface Tiles, Modified	620	Ft
Sidewalk Ramp, ADA, Modified	12240	Sft
Sidewalk, Conc, 4 inch, Modified	10080	Sft
**Sidewalk, Conc, 6 inch, Modified	2304	Sft
Pavt Mrkg, Ovly Cold Plastic, 18 inch, Stop Bar	87	Ft
Pavt Mrkg, Ovly Cold Plastic, 6 inch, Crosswalk	0	Ft
Pavt Mrkg, Ovly Cold Plastic, 12 inch, Crosswalk	920	Ft
Pavt Mrkg, Ovly Cold Plastic, Only	4	Ea
Pavt Mrkg, Ovly Cold Plastic, Thru Arrow Sym	0	Ea
Pavt Mrkg, Ovly Cold Plastic, Thru and Rt Turn Arrow Sym	0	Ea
Pavt Mrkg, Ovly Cold Plastic, Rt Turn Arrow Sym	1	Ea
Pavt Mrkg, Ovly Cold Plastic, Lt Turn Arrow Sym	3	Ea
Pavt Mrkg, Sprayable Thermopl, 4 inch, White	210	Ft
Pavt Mrkg, Sprayable Thermopl, 4 inch, Yellow	7450	Ft
Pavt Mrkg, Thermopl, 6 inch, Crosswalk	710	Ft
Pavt Mrkg, Sprayable Thermopl, 12 inch, Crosswalk	0	Ft
Pavt Mrkg, Thermopl, 18 inch, Stop Bar	256	Ft
Pavt Mrkg, Modified Urethane, 6 inch Cross Hatching, Yellow	312	Ft
Barricade, Type III, High Intensity, Double Sided, Lighted, Furn	4	Ea
Barricade, Type III, High Intensity, Double Sided, Lighted, Oper	4	Ea
Traffic Regulator Control	0.2	LS
Lighted Arrow, Type C, Furn	2	Ea
Lighted Arrow, Type C, Oper	2	Ea
Minor Traf Devices	0.2	LS
Plastic Drum, High Intensity, Furn	110	Ea
Plastic Drum, High Intensity, Oper	110	Ea
Sign, Type B, Temp, Prismatic, Furn	400	Sft
Sign, Type B, Temp, Prismatic, Oper	400	Sft
Water, Sodding/Seeding	0.4	Unit
Hydroseeding, Modified	0	Syd
Topsoil Surface, Furn, LM, Modified	19	Cyd
Water, Shutoff, Adj, Modified	4	Ea
Recessing for Pavt Mrkg, 6 inch	710	Ft
Recessing for Pavt Mrkg, 12 inch	920	Ft
Recessing for Pavt Mrkg, 18 inch	343	Ft

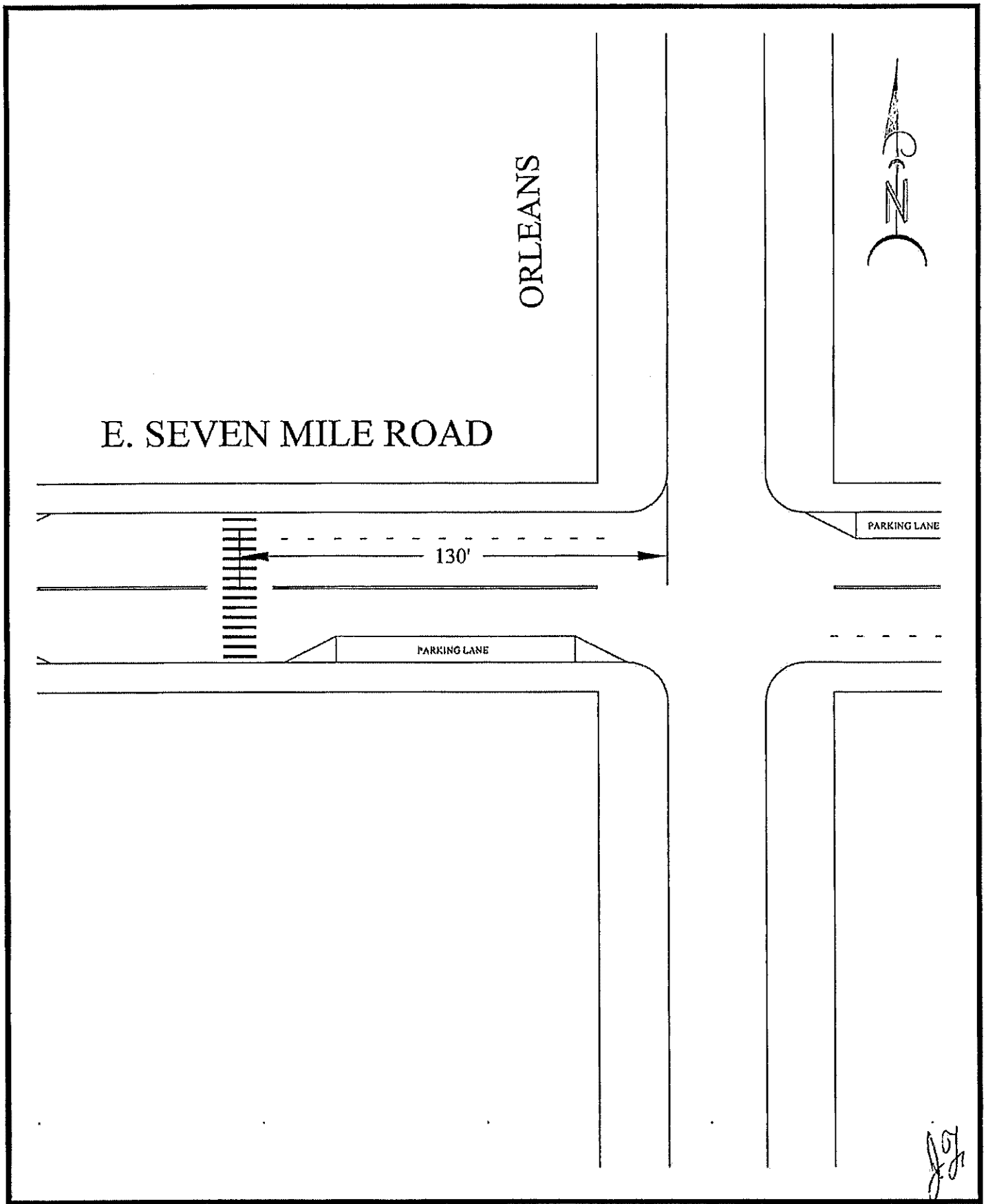

CITY OF DETROIT
DEPARTMENT OF PUBLIC WORKS
TRAFFIC ENGINEERING DIVISION

E. SEVEN MILE RD.
ORLEANS

DRAWN : A.D. BOLTON
SCALE : 1" = 40'
DATE : 03-11-2015

NO. SP-073

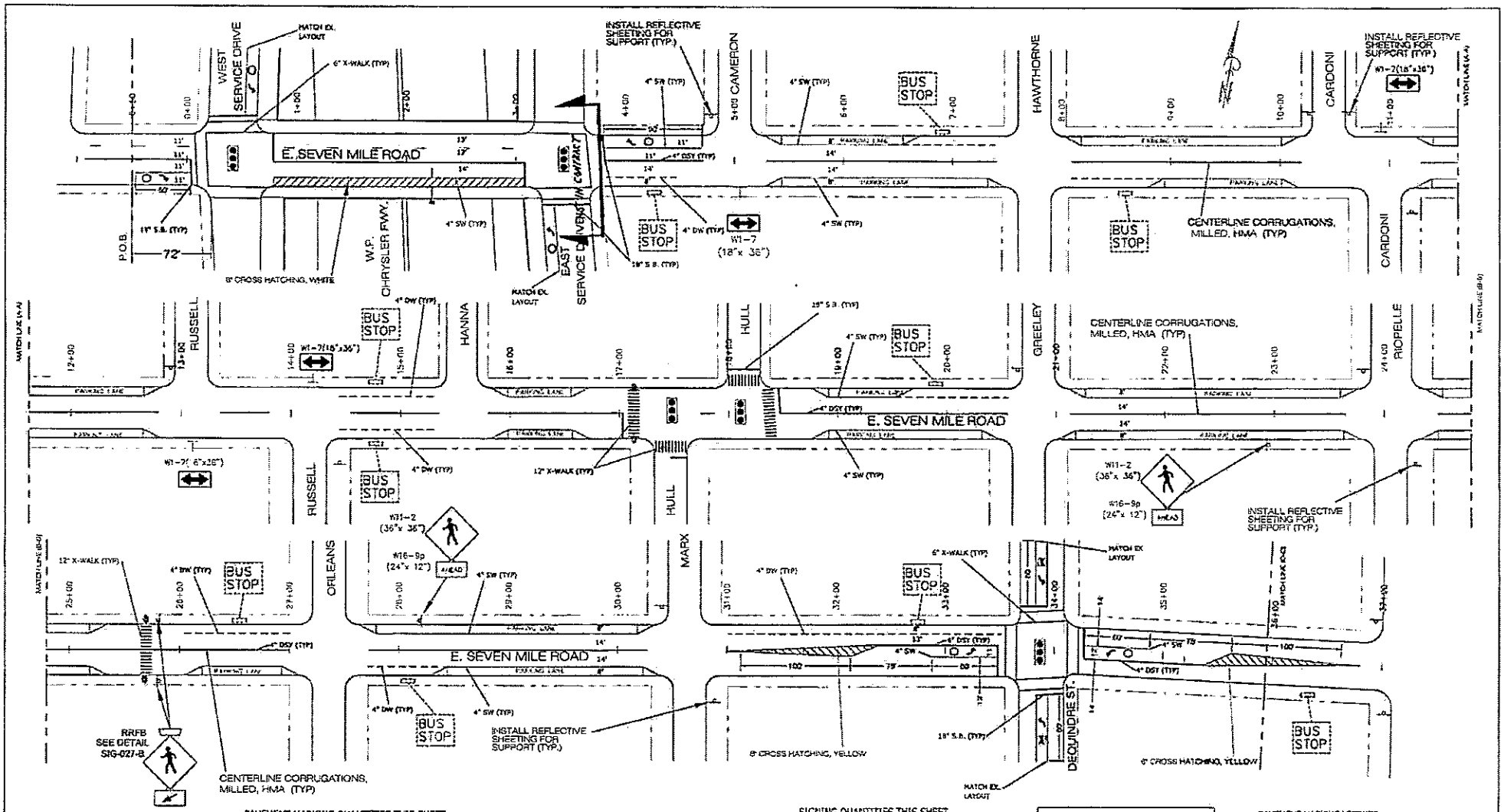

PAVEMENT MARKING QUANTITIES THIS SHEET

2960	Ft	Pavt Mrkg, Sprayable Thermopl, 4 inch, White
5065	Ft	Pavt Mrkg, Sprayable Thermopl, 4 inch, Yellow
240	Ft	Pavt Mrkg, Longit, 6 inch or Less Width, Rem
2505	Ft	Centerline Corrugations, Milled, HMA
6	Ea	Pavt Mrkg, Ovly Cold Plastic, Lt Turn Arrow Sym
2	Ea	Pavt Mrkg, Ovly Cold Plastic, Rt Turn Arrow Sym
6	Ea	Pavt Mrkg, Ovly Cold Plastic, Only
798	Ft	Pavt Mrkg, Ovly Cold Plastic, 6 inch, Crosswalk
466	Ft	Pavt Mrkg, Ovly Cold Plastic, 12 inch, Crosswalk
335	Ft	Pavt Mrkg, Ovly Cold Plastic, 18 inch, Stop Bar
1470	Ft	Recessing Pavement Markings, Transv
250	Ft	Pavt Mrkg, Modified Urethane, 6 inch, Cross Hatching, Yellow
260	Ft	Pavt Mrkg, Modified Urethane, 6 inch, Cross Hatching, White

SIGNING QUANTITIES THIS SHEET

79	Sft	Sign, Type IIIB
275	Ft	Post, Steel, 3 lb
3	Ea	Band, Sign
1	Ea	Sign, Type III, Rem
11	Ea	Reflective panel for Support
2	Ea	Rectangular Rapid Flashing Beacon, Two-Sided

NOTE:
SIGNS AND PAVEMENT MARKING EXACT LOCATIONS TO BE MARKED BY THE FIELD ENGINEER (INSPECTOR); THEREFORE CONTRACTOR MUST CONTACT PROJECT ENGINEER AT LEAST THREE BUSINESS DAYS PRIOR TO ANY SIGN INSTALLATION.

PAVEMENT MARKING LEGENDD

SW	SOLID WHITE
SY	SOLID YELLOW
DSY	DOUBLE SOLID YELLOW
SKW	SKIP WHITE (10 ft Solid + 30 ft Gap)
SKY	SKIP YELLOW (10 ft Solid + 30 ft Gap)
DW	DOTTED WHITE (2 ft Solid + 8 ft Gap)
SB	STOP BAR

ALL SIGNS AND PAVEMENT MARKING PLAN SHOWN ARE PROPOSED

SCALE

80

DESIGNED BY	S. KULANGARA	APPROVED:	
DRAWN BY	J. LAPPIN / J. THOMAS		
TRACED BY			
CHECKED BY	P. NANNAPANENI		

City of Detoit
Department of Public Works
Traffic Engineering Division

E. SEVEN MILE ROAD
BETWEEN
I-75 WEST SERVICE DRIVE & VAN DYKE

PROPOSED SIGNING AND PAVEMENT MARKING PLAN

SHEET __ OF __ SHEETS
SCALE: 1" = 40
FROM STA.: 0+00
TO STA.: 35+94
DATE: 05/05/2011

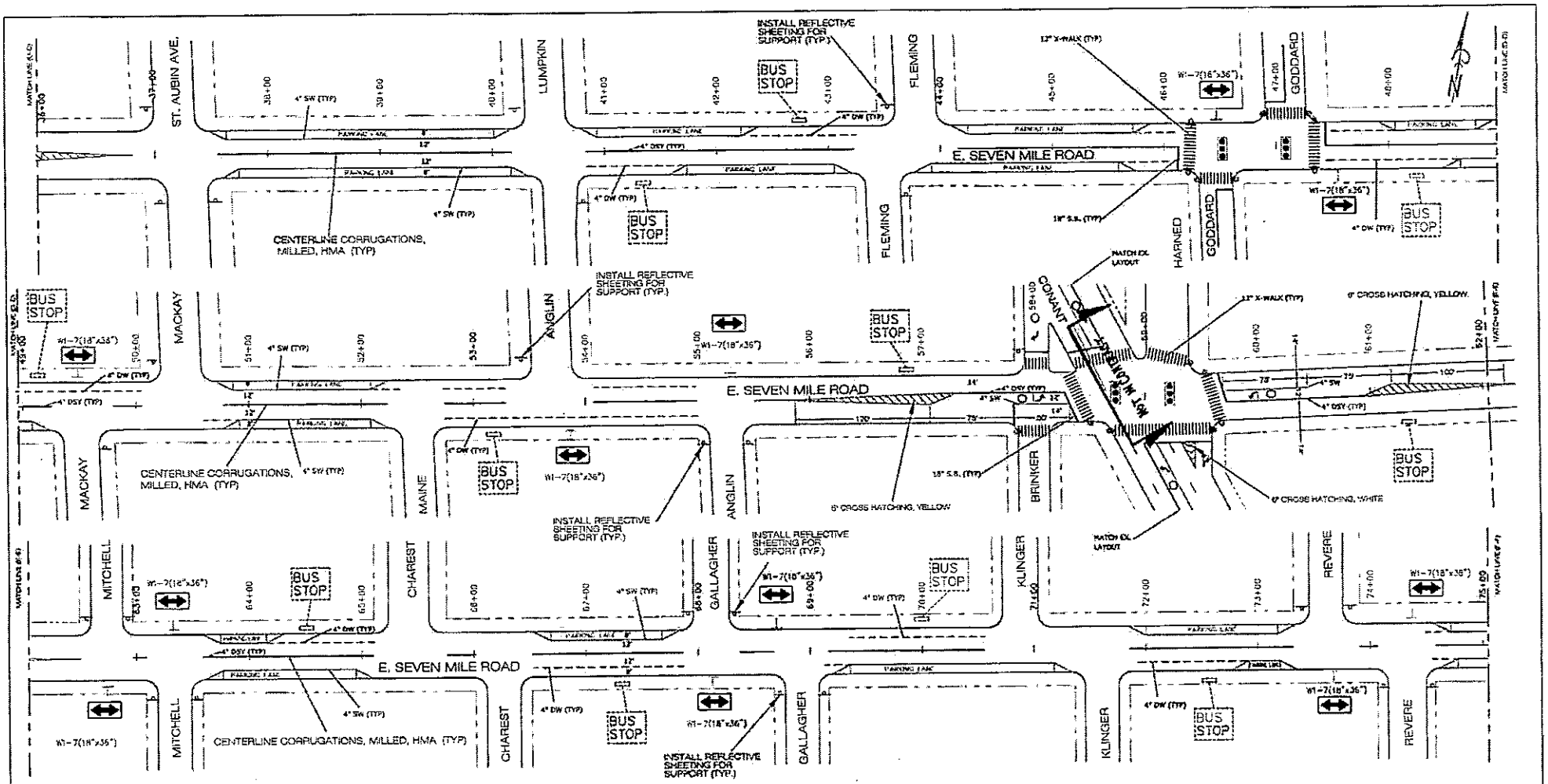

PAVEMENT MARKING QUANTITIES THIS SHEET

3090	Ft	Pavt Mrkg, Sprayable Thermopl, 4 inch, White
5025	Ft	Pavt Mrkg, Sprayable Thermopl, 4 inch, Yellow
300	Ft	Pavt Mrkg, Longit, 6 inch or Less Width, Rem
2512	Ft	Centerline Corrugations, Milled, HMA
[illegible]	Ea	Pavt Mrkg, Ovly Cold Plastic, Rt Turn Arrow Sym
4	Ea	Pavt Mrkg, Ovly Cold Plastic, Lt Turn Arrow Sym
6	Ea	Pavt Mrkg, Ovly Cold Plastic, Only
1	Ea	Pavt Mrkg, Ovly Cold Plastic, Thru and Rt Turn Arrow Sym
1492	Ft	Pavt Mrkg, Ovly Cold Plastic, 12 inch, Crosswalk
231	Ft	Pavt Mrkg, Ovly Cold Plastic, 18 inch, Stop Bar
1723	Ft	Recessing Pavement Markings, Transv
250	Ft	Pavt Mrkg, Modified Urethane, 6 inch, Cross Hatching, Yellow
32	Ft	Pavt Mrkg, Modified Urethane, 6 inch, Cross Hatching, White

SIGNING QUANTITIES THIS SHEET

79	Sft	Sign, Type IIIB
200	Ft	Post, Steel, 3 lb
2	Ea	Band, Sign
25	Ea	Reflective panel for Support

NOTE:
SIGNS AND PAVEMENT MARKING EXACT LOCATIONS TO BE MARKED BY THE FIELD ENGINEER (INSPECTOR); THEREFORE CONTRACTOR MUST CONTACT PROJECT ENGINEER AT LEAST THREE BUSINESS DAYS PRIOR TO ANY SIGN INSTALLATION.

PAVEMENT MARKING LEGEND

SW	SOLID WHITE
SY	SOLID YELLOW
DSY	DOUBLE SOLID YELLOW
SKW	SKIP WHITE (10 ft Solid + 30 ft Gap)
SKY	SKIP YELLOW (10 ft Solid + 30 ft Gap)
DW	DOTTED WHITE (2 ft Solid + 6 ft Gap)
SB	STOP BAR

ALL SIGNS AND PAVEMENT MARKING PLAN SHOWN ARE PROPOSED

SCALE

81

DESIGNED BY	S. KULANGARA	APPROVED:	
DRAWN BY	J. LAPPIN / J. THOMAS		
TRACED BY			
CHECKED BY	P. [illegible]		

City of Detoit
Department of Public Works
Traffic Engineering Division

E. SEVEN MILE ROAD
BETWEEN
I-75 WEST SERVICE DRIVE & VAN DYKE

PROPOSED SIGNING AND PAVEMENT MARKING PLAN

SHEET __ OF __ SHEETS
SCALE: 1" = 40'
FROM STA. 36+94
TO STA.: 75+05
DATE: 05/05/2011

SEVEN MILE LANE-ING
WOODWARD - CONANT

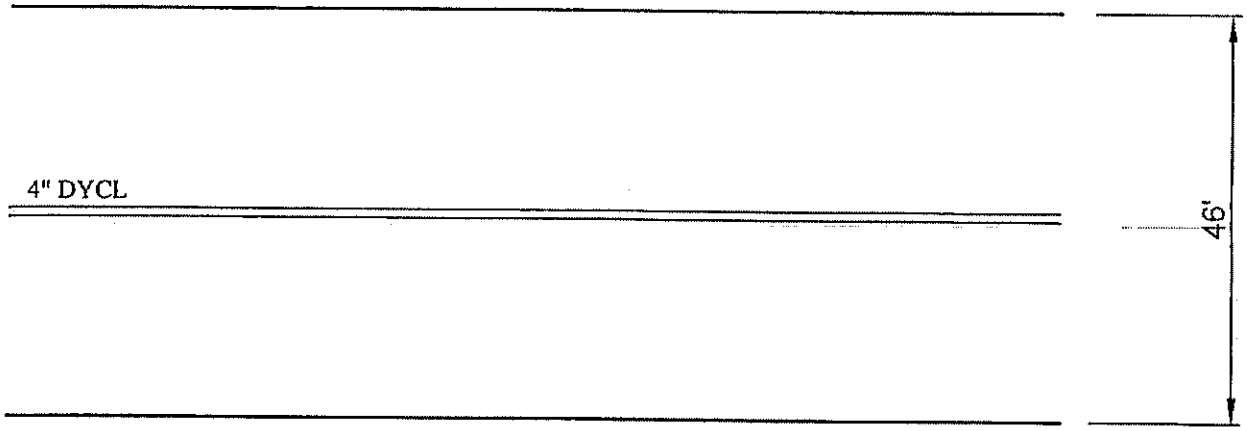

EXISTING

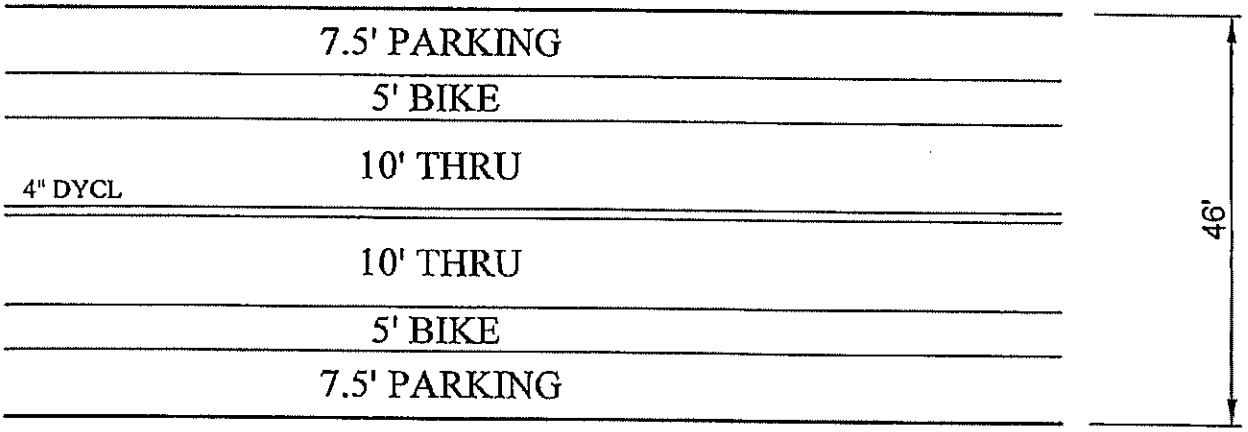

PROPOSED

SHEET: 6 OF 9

CITY OF DETROIT DEPARTMENT OF PUBLIC WORKS TRAFFIC ENGINEERING DIVISION	SEVEN MILE E. CHRYSLER FWY. ESD - MARX	DRAWN : W.L. WILLIAMS SCALE : N / A DATE : 03 - 01 - 2013 NO. CL-50E-06

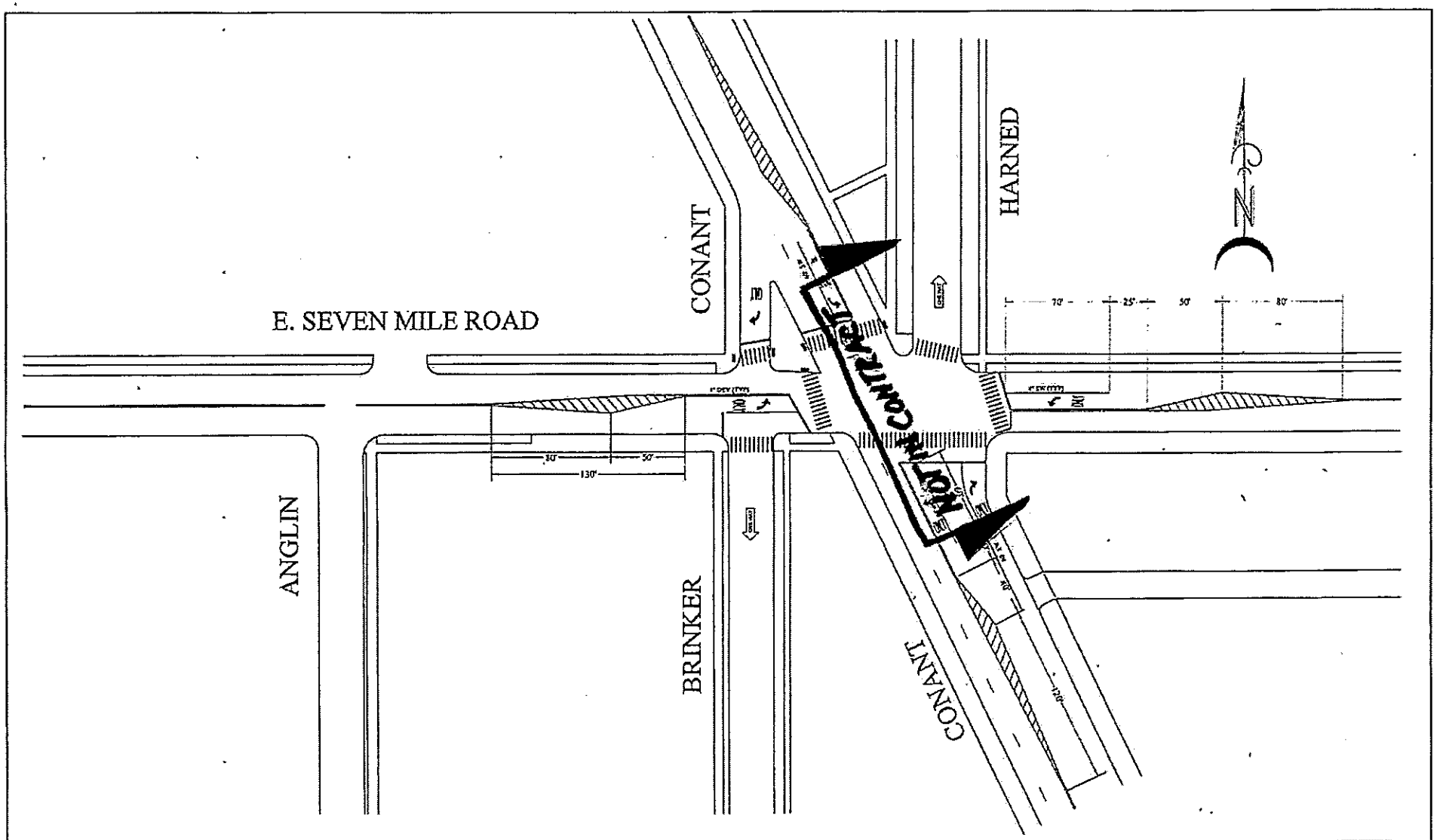

CITY OF DETROIT DEPARTMENT OF PUBLIC WORKS TRAFFIC ENGINEERING DIVISION	SEVEN MILE RD E/ CONANT @ BRINKER	DRAWN : A.D. Bolton SCALE : 1" = 60' DATE : 08 - 25 - 2014 NO# D-50

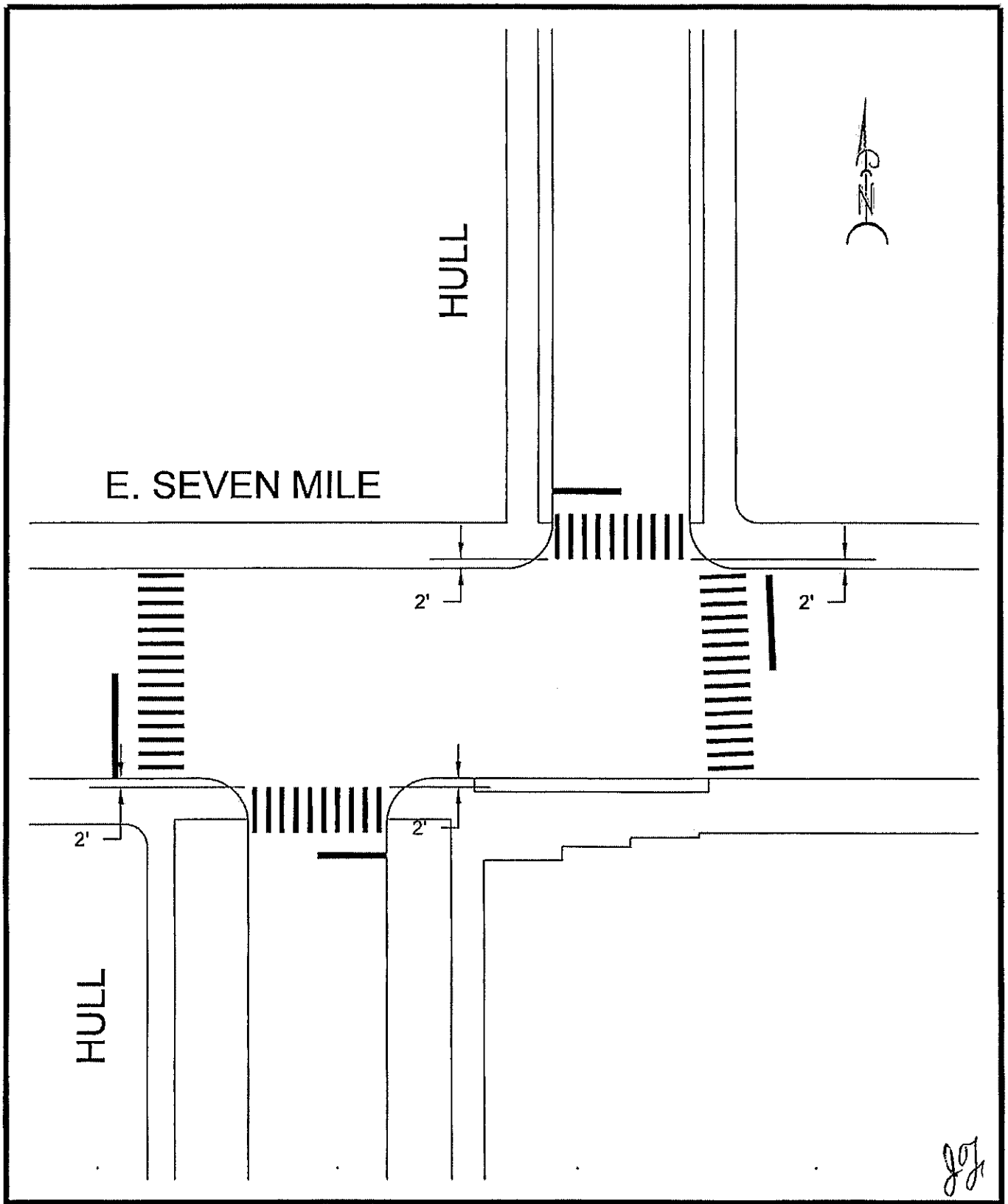

CITY OF DETROIT
DEPARTMENT OF PUBLIC WORKS
TRAFFIC ENGINEERING DIVISION

E. SEVEN MILE
HULL

DRAWN : A.D. BOLTON
SCALE : 1" = 30'
DATE : 03 - 10 - 2015

NO D-146

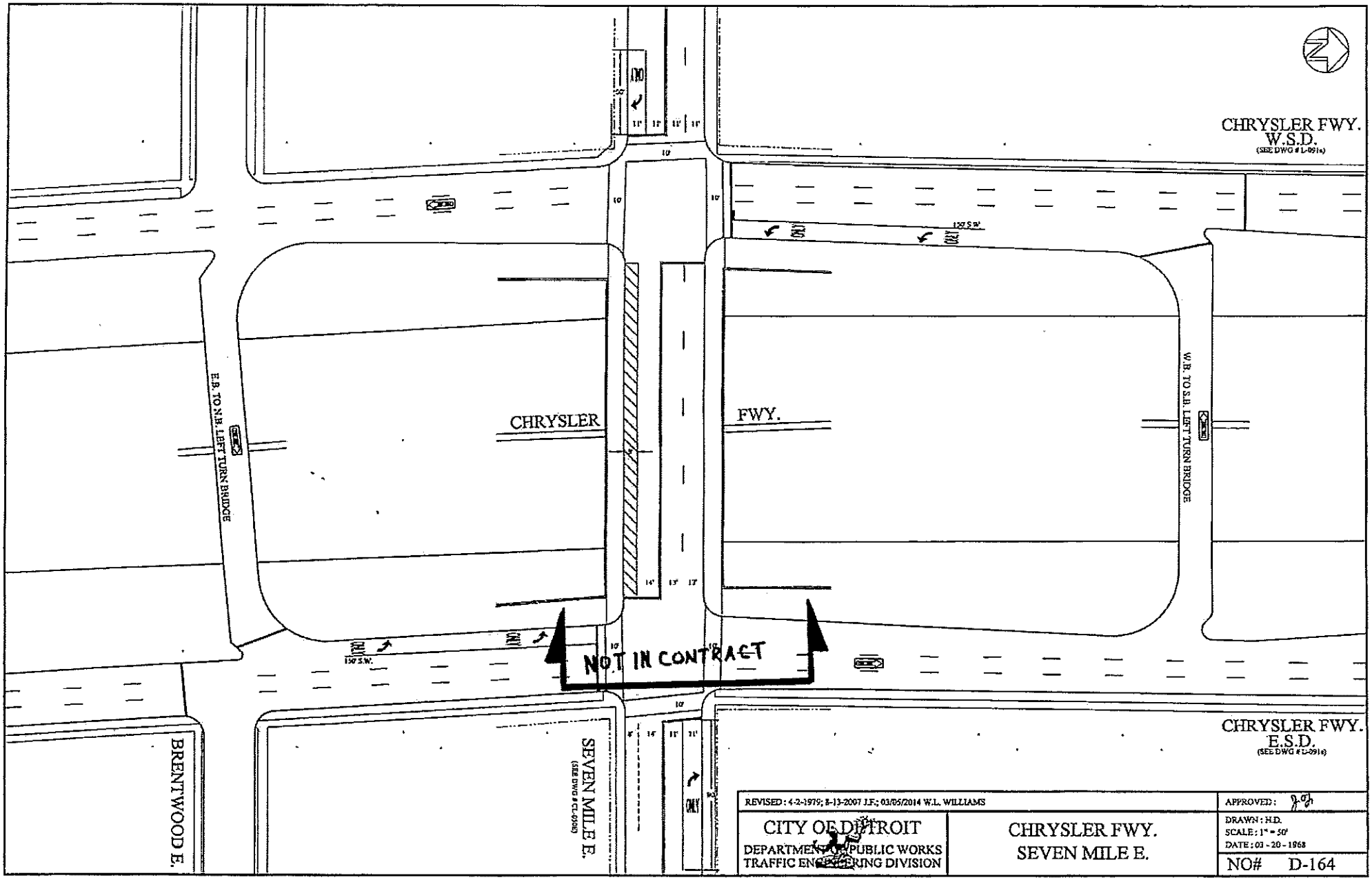
CHRYSLER FWY.
W.S.D.
(SEE DWG # L-091a)
CHRYSLER
FWY.
E.B. TO N.B. LEFT TURN BRIDGE
W.B. TO S.B. LEFT TURN BRIDGE
150' S.W.
NOT IN CONTRACT
CHRYSLER FWY.
E.S.D.
(SEE DWG # L-091a)
BRENTWOOD E.
SEVEN MILE E.
(SEE DWG # CL-050E)
REVISED: 4-2-1979; 8-13-2007 J.F.; 03/05/2014 W.L. WILLIAMS
APPROVED:
CITY OF DETROIT
DEPARTMENT OF PUBLIC WORKS
TRAFFIC ENGINEERING DIVISION
CHRYSLER FWY.
SEVEN MILE E.
DRAWN: H.D.
SCALE: 1" = 50'
DATE: 03 - 20 - 1968
NO# D-164

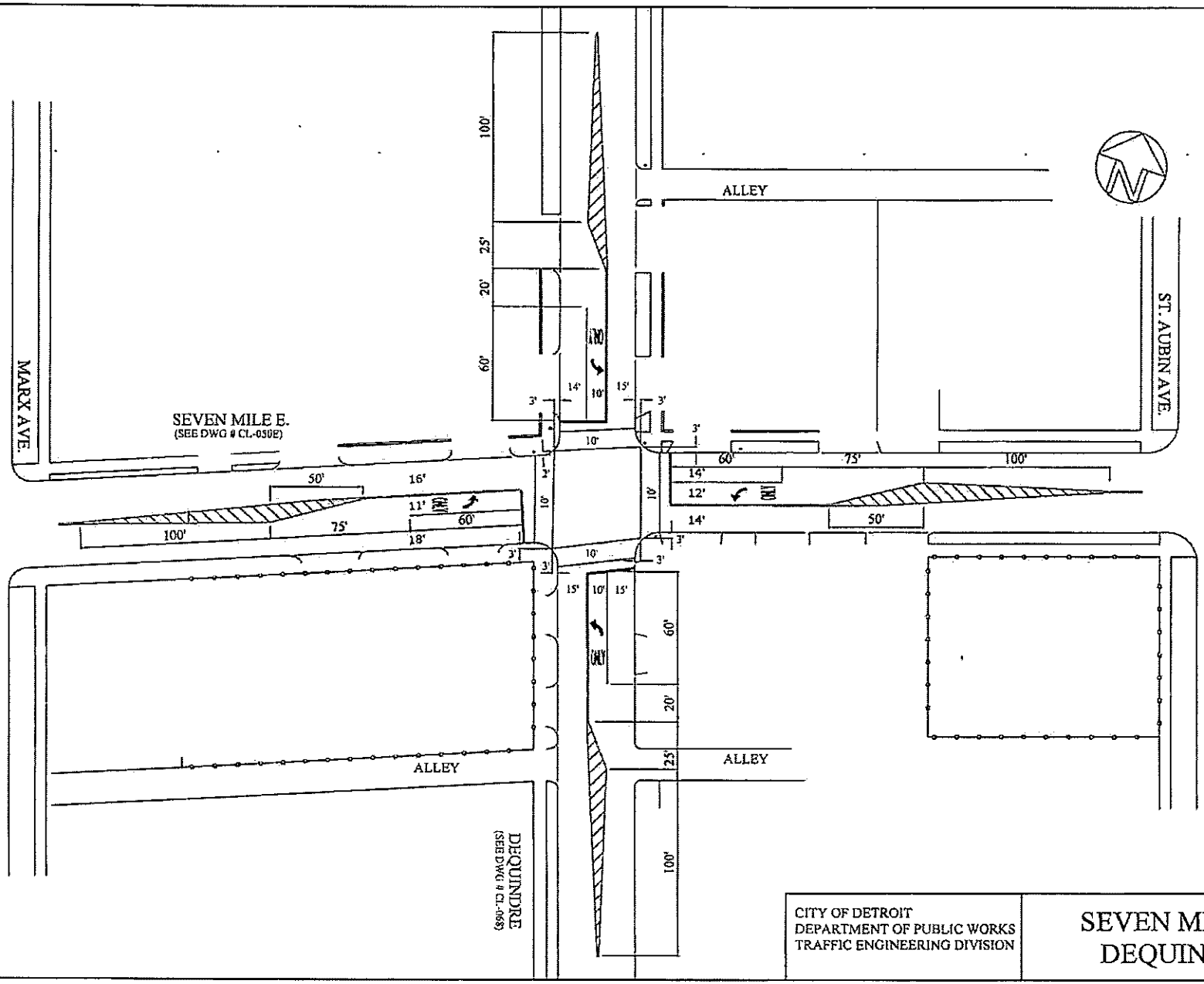

REV DATE: 03 - 06 - 2014 W.L.W.
REV.DATE: 05 - 30 - 2012 J.F.
REV.DATE: 04 - 19 - 2001
REV.DATE: 04 - 16 - 2001

CITY OF DETROIT
DEPARTMENT OF PUBLIC WORKS
TRAFFIC ENGINEERING DIVISION

SEVEN MILE E.
DEQUINDRE

DRAWN BY: J. LAPPIN
SCALE: 1" = 50'
DATE: 01 - 24 - 2001

NO. D - 190

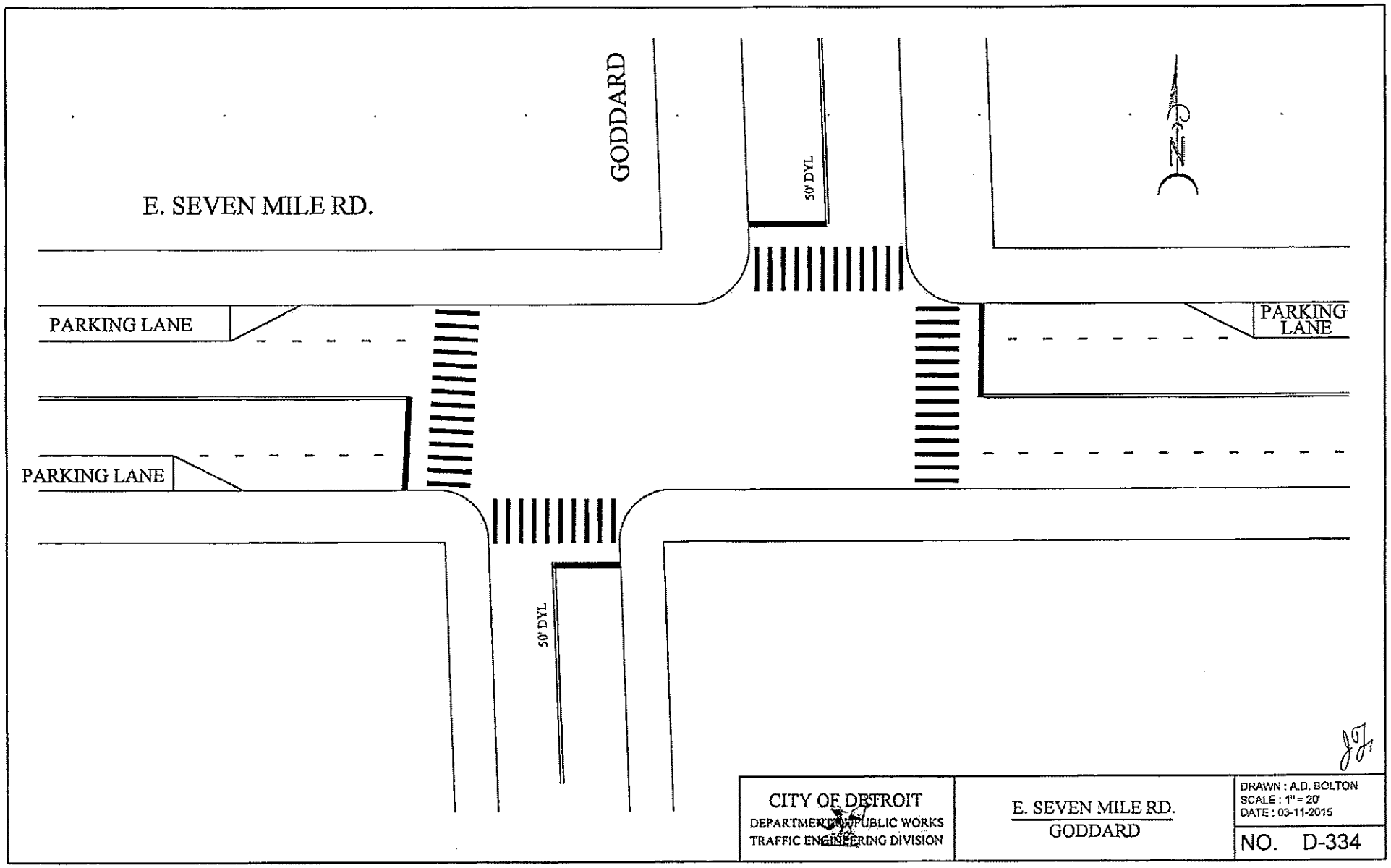
E. SEVEN MILE RD.
GODDARD
50' DYL
PARKING LANE
PARKING LANE
PARKING LANE
50' DYL
N
CITY OF DETROIT
DEPARTMENT OF PUBLIC WORKS
TRAFFIC ENGINEERING DIVISION
E. SEVEN MILE RD.
GODDARD
DRAWN : A.D. BOLTON
SCALE : 1" = 20'
DATE : 03-11-2015
NO. D-334

SEVEN MILE LANE-ING
WOODWARD - CONANT

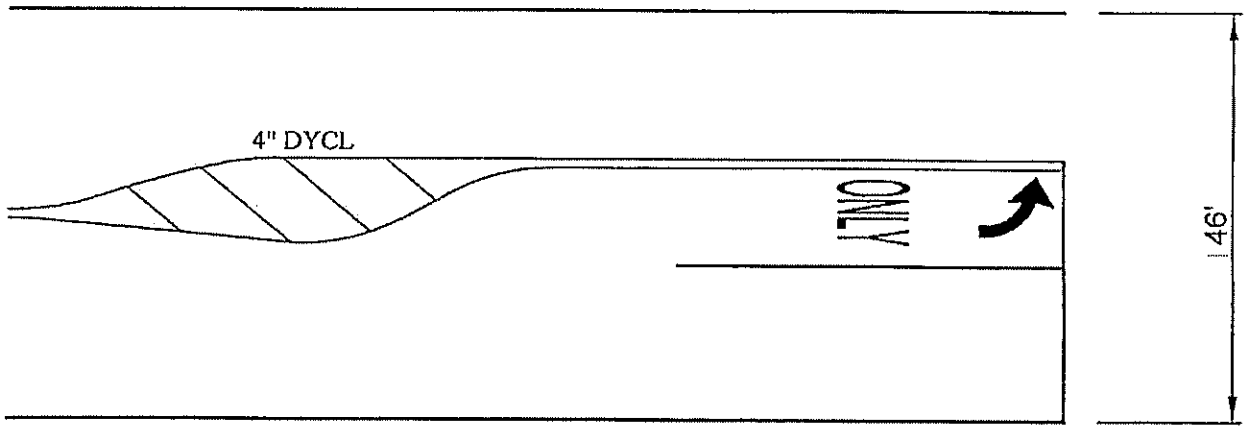

EXISTING

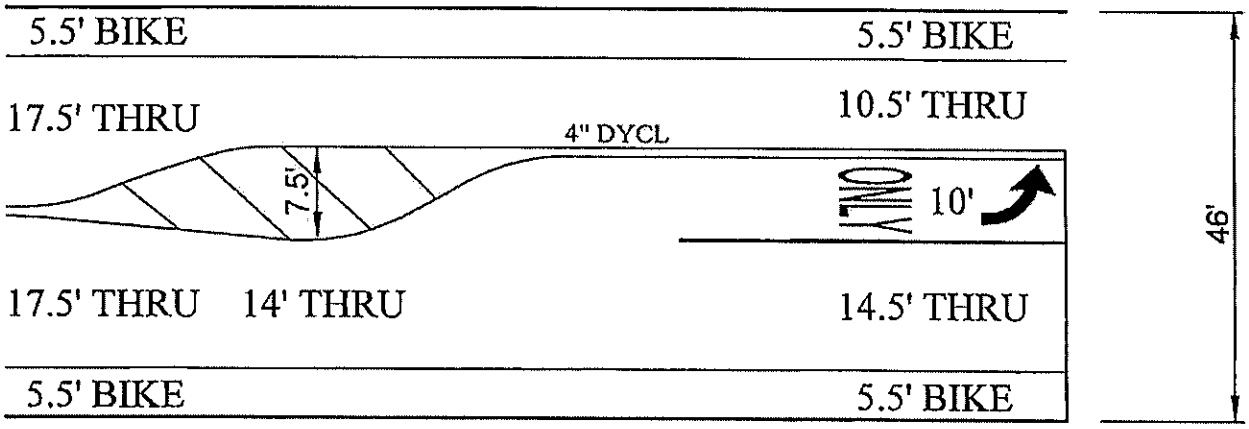

PROPOSED

SHEET: 7 OF 9

CITY OF DETROIT DEPARTMENT OF PUBLIC WORKS TRAFFIC ENGINEERING DIVISION	SEVEN MILE E. MARX - DEQUINDRE	DRAWN : W.L. WILLIAMS SCALE : N / A DATE : 03 - 01 - 2013 NO. CL-50E-07

SEVEN MILE LANE-ING
WOODWARD - CONANT

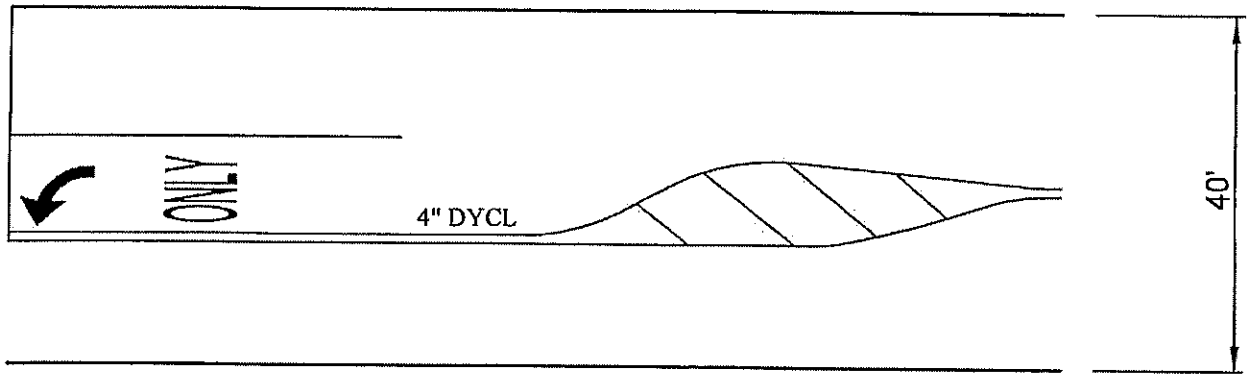

EXISTING

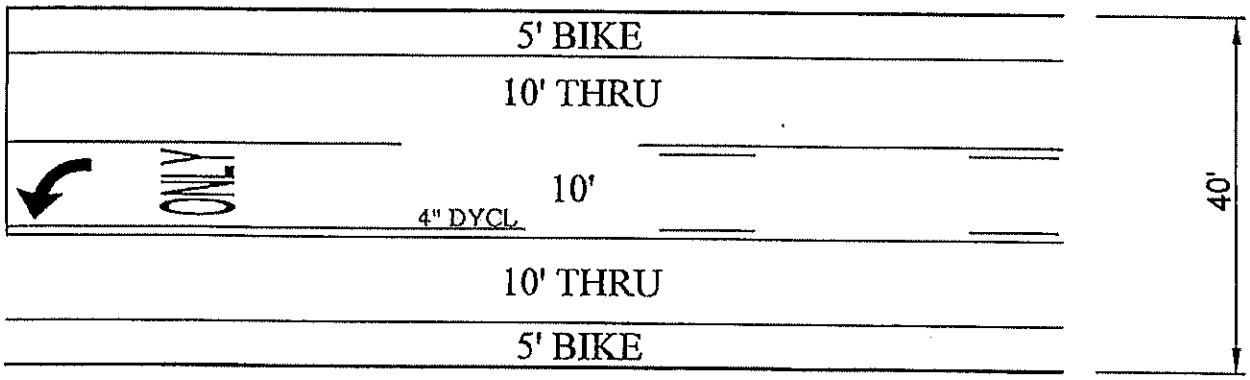

PROPOSED

SHEET: 8 OF 9

CITY OF DETROIT DEPARTMENT OF PUBLIC WORKS TRAFFIC ENGINEERING DIVISION	SEVEN MILE E. DEQUINDRE - ST. AUBIN	DRAWN : W.L. WILLIAMS SCALE : N / A DATE : 03 - 01 - 2013 NO. CL-50E-08

SEVEN MILE LANE-ING
WOODWARD - CONANT

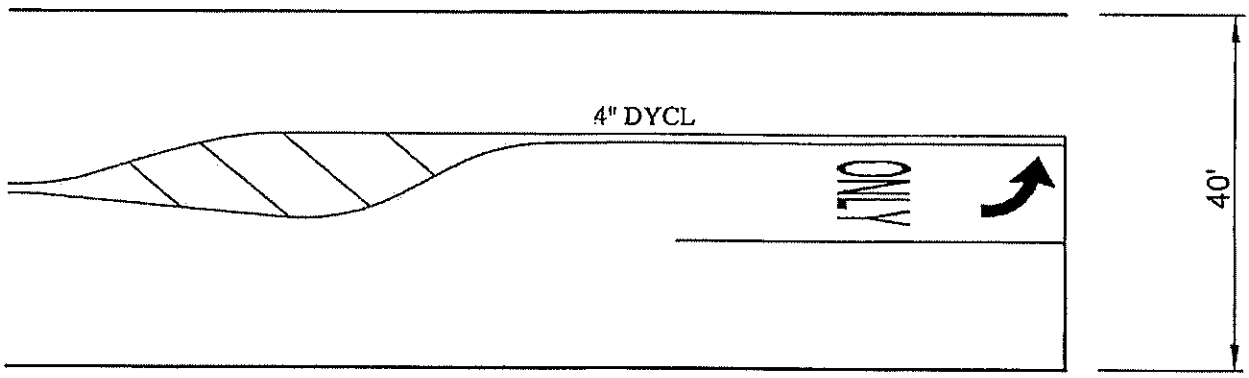

EXISTING

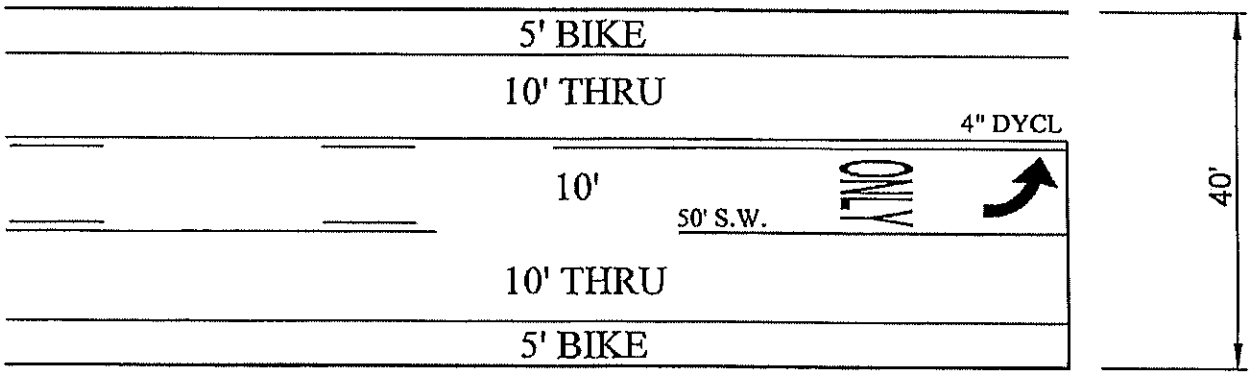

PROPOSED

SHEET: 9 OF 9

CITY OF DETROIT DEPARTMENT OF PUBLIC WORKS TRAFFIC ENGINEERING DIVISION	SEVEN MILE E. ST. AUBIN - CONANT	DRAWN : W.L. WILLIAMS SCALE : N / A DATE : 03 - 01 - 2013 NO. CL-50E-09

HARPER

I-94 CROSSOVER TO CADIEUX

TRAFFIC DATA:

PRESENT: 5,480
FUTURE: 6,103
COMMERCIAL: 3%
POSTED SPEED: 30 MPH

TYPE OF PAVEMENT	ASPHALT OVER CONCRETE	
LENGTH		4,026 FEET
PAVEMENT WIDTH		48 - 50 FEET (VARIES)

SCHEDULE OF ITEMS

LOCATION: **HARPER: I-94 CROSSOVER TO CADIEUX**

LENGTH: **4,026 FT** **WIDTH : 48 - 50 FT VARIES**

WORK TYPE: Cold Milling, HMA Resurfacing, Concrete Curb, Sidewalk, Driveway Approach, Drainage Improvements and Misc Construction

Description of Work	Estimated Quantity	Item Unit
Mobilization, Max.	0.15	LS
**Sidewalk, Rem	2472	Syd
**Curb, Rem, Modified	1393	Ft
Pavt, Rem	0	Syd
Excavation, Earth, Modified	10	Cyd
Granular Material, Cl II	10	Cyd
Aggregate Base, 4 inch	40	Syd
Sewer Cleanout, Modified	300	Ft
Dr Structure Cover, Modified	19521	Lb
Catch Basin A, Modified	1	Ea
Catch Basin BT, Modified	1	Ea
Dr Structure Cleaning, Modified	30	Ea
Dr Structure Cover, Adj, Case 1, Modified	65	Ea
Dr Structure Cover, Adj, Case 2, Modified	14	Ea
Reconstructing Dr Structure, Case 1, Modified	1	Ea
Reconstructing Dr Structure, Case 2, Modified	1	Ea
Pavt for Butt Joints, Rem	187	Syd
Hand Patching	5	Ton
HMA, 4E3	2450	Ton
HMA, 5E3	1838	Ton
Cold Milling HMA Surface, Modified	22270	Syd
HMA Surface, Rem	9594	Syd
Conditioning Existing Pavement, Modified	301	Ton
HMA Approach, Modified	1847	Ton
HMA Shoulder, Modified	50	Ton
Pavt, Cleaning	0.15	LS
Conc Pavt , Misc, Nonreinf, 8 inch, Modified	0	Syd
Pavt Repr, Nonreinf Conc, 10 inch, Modified	40	Syd
**Curb, Conc, Detail CD, Modified	1393	Ft

** Estimated quantities for use at the discretion of the Engineer and subject to the Bureau Chief's or Head Engineer's approval during construction.

LOCATION: HARPER: I-94 CROSSOVER TO CADIEUX

LENGTH: 4,026 FT **WIDTH :** 48 - 50 FT VARIES

WORK TYPE: Cold Milling, HMA Resurfacing, Concrete Curb, Sidewalk, Driveway Approaches, Drainage Improvements and Misc Construction

Description of Work	Estimated Quantity	Item Unit
Pavt Repr, Rem, Modified	40	Syd
Sidewalk, Conc Repl, 4 inch with Tree Roots, Modified	288	Sft
Sidewalk, Conc Repl, 6 inch with Tree Roots, Modified	0	Sft
Detectable Warning Surface Tiles, Modified	465	Ft
Sidewalk Ramp, ADA, Modified	11676	Sft
Sidewalk, Conc, 4 inch, Modified	9114	Sft
**Sidewalk, Conc, 6 inch, Modified	1168	Sft
Pavt Mrkg, Ovly Cold Plastic, 18 inch, Stop Bar	78	Ft
Pavt Mrkg, Ovly Cold Plastic, 6 inch, Crosswalk	226	Ft
Pavt Mrkg, Ovly Cold Plastic, 12 inch, Crosswalk	0	Ft
Pavt Mrkg, Ovly Cold Plastic, Only	2	Ea
Pavt Mrkg, Ovly Cold Plastic, Thru Arrow Sym	0	Ea
Pavt Mrkg, Ovly Cold Plastic, Thru and Rt Turn Arrow Sym	0	Ea
Pavt Mrkg, Ovly Cold Plastic, Rt Turn Arrow Sym	1	Ea
Pavt Mrkg, Ovly Cold Plastic, Lt Turn Arrow Sym	1	Ea
Pavt Mrkg, Sprayable Thermopl, 4 inch, White	315	Ft
Pavt Mrkg, Sprayable Thermopl, 4 inch, Yellow	1630	Ft
Pavt Mrkg, Thermopl, 6 inch, Crosswalk	0	Ft
Pavt Mrkg, Sprayable Thermopl, 12 inch, Crosswalk	0	Ft
Pavt Mrkg, Thermopl, 18 inch, Stop Bar	0	Ft
Pavt Mrkg, Modified Urethane, 6 inch Cross Hatching, Yellow	14	Ft
Barricade, Type III, High Intensity, Double Sided, Lighted, Furn	4	Ea
Barricade, Type III, High Intensity, Double Sided, Lighted, Oper	4	Ea
Traffic Regulator Control	0.15	LS
Lighted Arrow, Type C, Furn	2	Ea
Lighted Arrow, Type C, Oper	2	Ea
Minor Traf Devices	0.15	LS
Plastic Drum, High Intensity, Furn	81	Ea
Plastic Drum, High Intensity, Oper	81	Ea
Sign, Type B, Temp, Prismatic, Furn	400	Sft
Sign, Type B, Temp, Prismatic, Oper	400	Sft
Water, Sodding/Seeding	0.3	Unit
Hydroseeding, Modified	34	Syd
Topsoil Surface, Furn, LM, Modified	5	Cyd
Water, Shutoff, Adj, Modified	7	Ea
Recessing for Pavt Mrkg, 6 inch	226	Ft
Recessing for Pavt Mrkg, 12 inch	0	Ft
Recessing for Pavt Mrkg, 18 inch	78	Ft

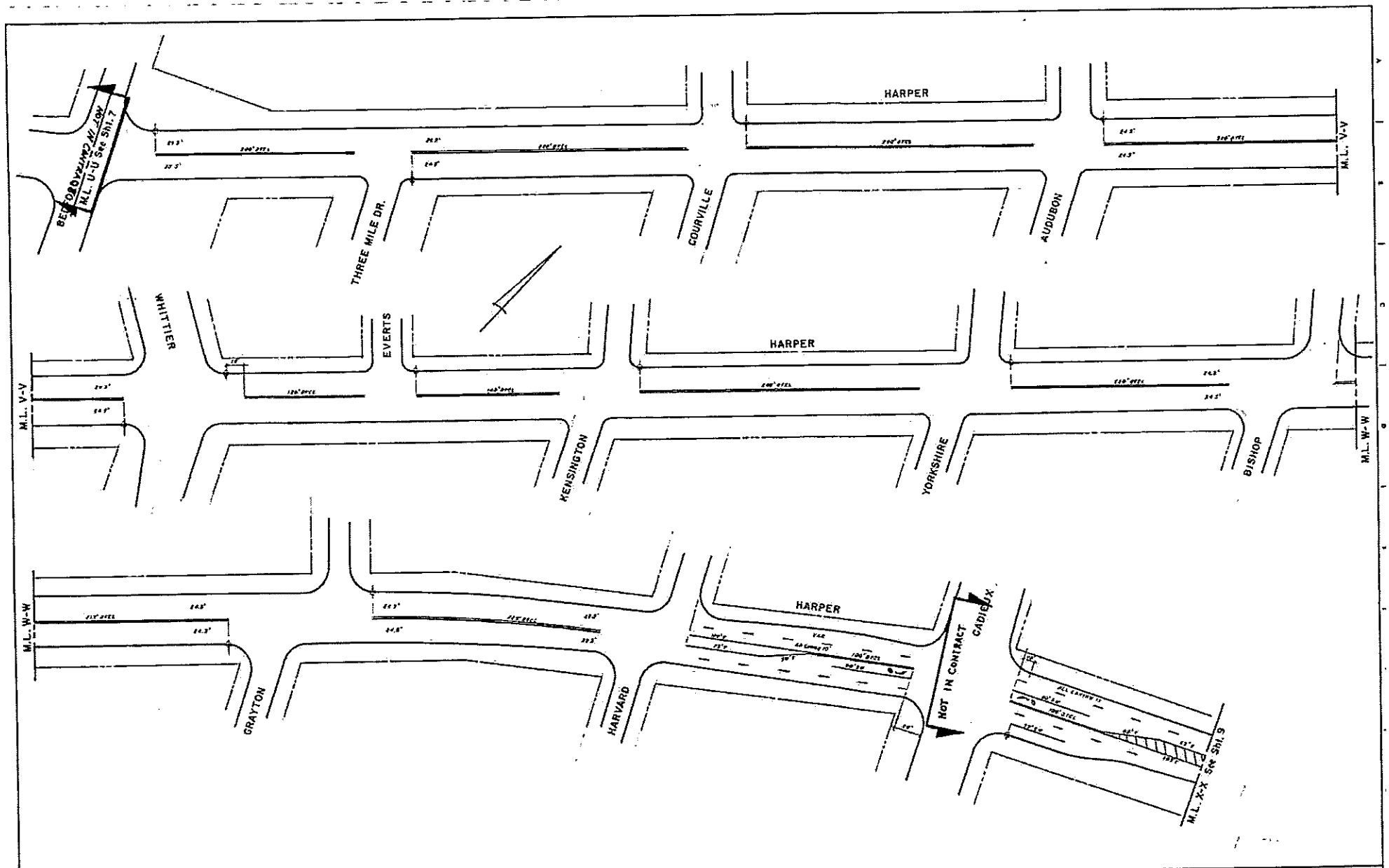

DESIGNED BY	EL	
DRAWN BY	ER	
TRACED BY		
CHECKED BY		

CITY OF DETROIT
DEPARTMENT OF TRANSPORTATION
TRANSPORTATION ENGINEERING

HARPER

MT. ELLIOTT – ~~KINGSVILLE~~
BEDFORD – 200' E/O CADIEUX

SHEET 8 OF 9 SHEETS
SCALE 1" = 40'
DRWG NO. CL-5
DATE 7/26/94

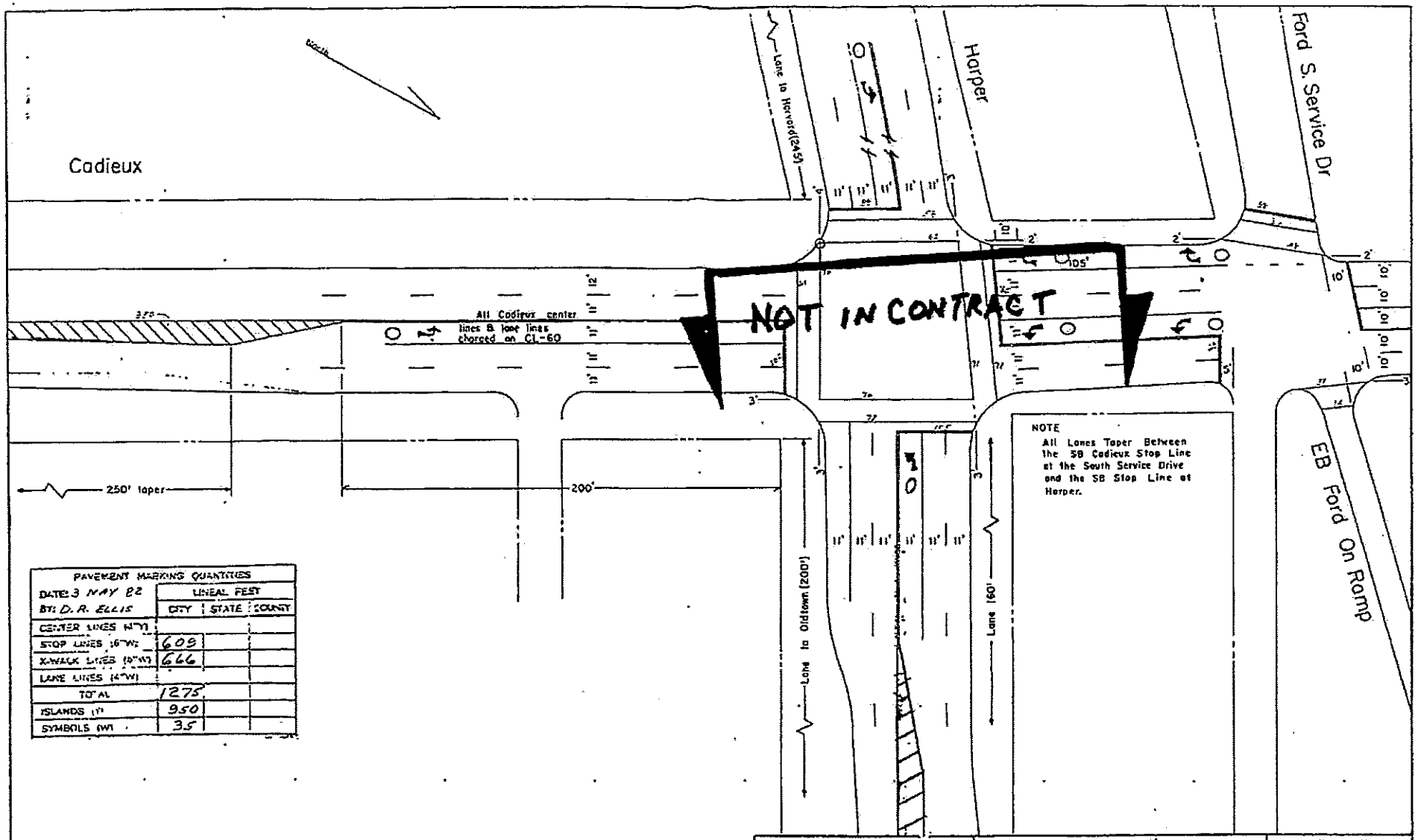

PAVEMENT MARKING QUANTITIES			
DATE: 3 MAY 82	LINEAL FEET		
BY: D. R. ELLIS	CITY	STATE	COUNTY
CENTER LINES (4"W)			
STOP LINES (6"W)	609		
X-WALK LINES (10"W)	666		
LANE LINES (4"W)			
TOTAL	1275		
ISLANDS (1")	950		
SYMBOLS (W)	35		

REV 13 DEC 96 GL
Rev. 28 April 82 D.R.E.
Revised 2-26-1979 Add Symbol SB
Revised 11 April 1978;
FAUS Project M2000 (033)

CITY OF DETROIT
DEPARTMENT OF TRANSPORTATION
PLANNING & TRAFFIC ENGINEERING

Cadieux – Harper

DRAWN T.D Mullin
SCALE 1" = 40'
DATE 6 October 1976

NO. E-50

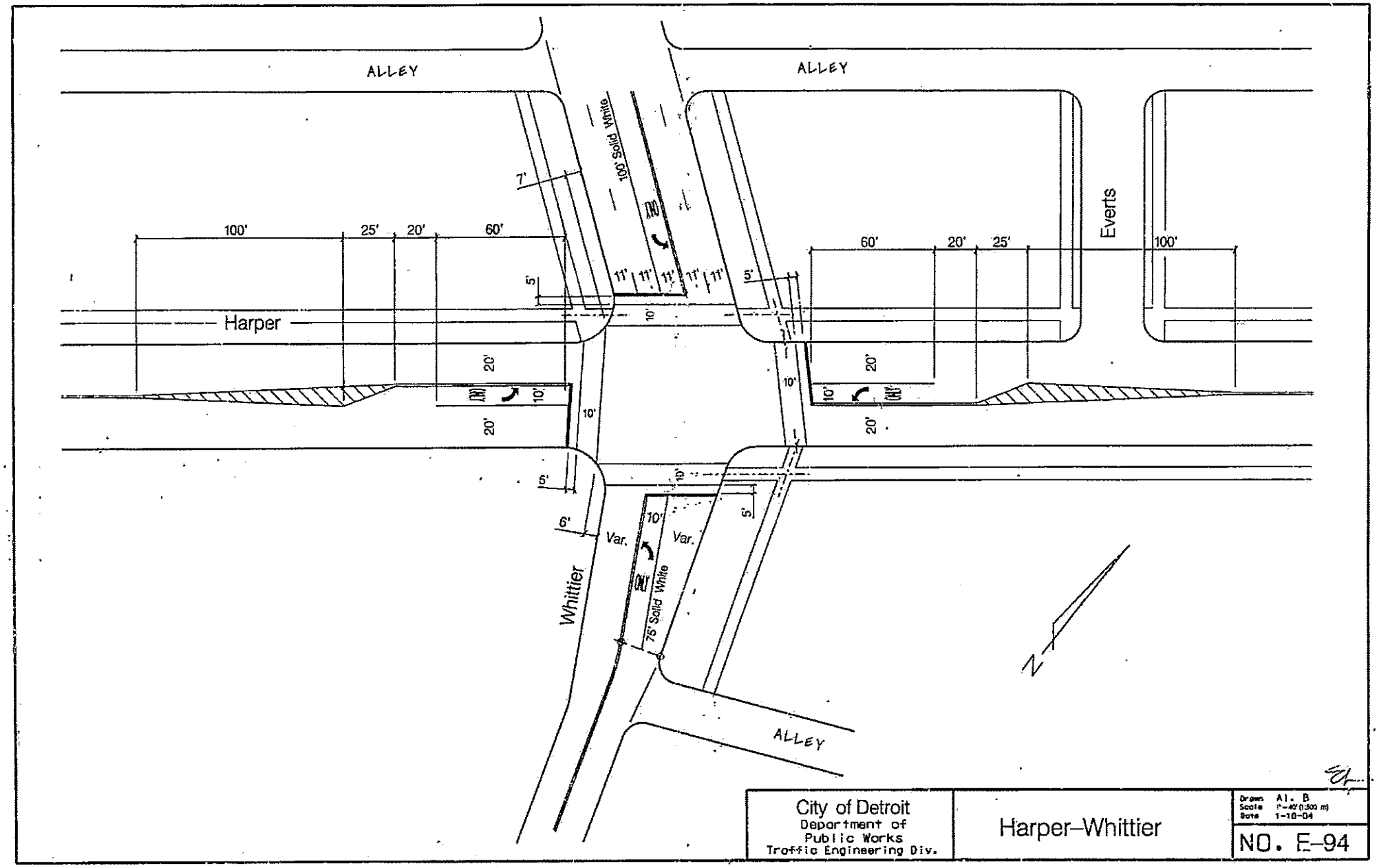
ALLEY
ALLEY
100' Solid White
7'
100'
25'
20'
60'
60'
20'
25'
100'
Everts
5'
11'
11'
11'
11'
11'
5'
Harper
10'
20'
20'
10'
10'
10'
20'
20'
5'
10'
5'
6'
Var.
Var.
10'
Whittier
75' Solid White
ALLEY
N
City of Detroit
Department of
Public Works
Traffic Engineering Div.
Harper–Whittier
Drawn Al. B
Scale 1"=40' (1:500 m)
Date 1-10-04
NO. E-94

PROGRESS CLAUSE

PROGRESS CLAUSE: After receiving notice of award of contract, start work on the date designated as the starting date herein or the date agreed upon with the Engineer. In no case, shall any work be commenced prior to receipt of formal notice of award by the department.

The starting date for this project shall be within ten (10) calendar days after receiving notice of award and the entire project shall be completed **within 75 calendar days inclusive of any rain days (**except any landscaping maintenance guarantee work) from the starting date with all the HMA paving completed **within 60 calendar days** from start of the project. No HMA pavement work will be allowed between October 15, 2015 and April 15, 2016.

The low bidder(s) for the work covered by this proposal will be required to meet with department representatives to work out a detailed progress schedule. The schedule for this meeting will be set within one week after the low bidder is determined.

The named subcontractor(s) for Specialty and/or Designated Items (if such items are designated in the proposal) which materially affect the work schedule, shall also be present at the scheduled meeting and they will be required to sign the Progress Schedule to indicate their approval of the scheduled dates of work set forth in the Progress Schedule.

The City Engineering Division, Department of Public Works will arrange the time and place for the meeting.

The Progress Schedule shall include, as a minimum, the controlling work items for the completion of the project and the planned dates (or work day for a work day project) that these work items will be controlling operations. When specified in the bidding proposal, the date the project is to be opened to traffic as well as the final project completion date shall also be included in the project schedule.

If the Bidding Proposal specifies other controlling dates, these shall also be included in the Progress Schedule.

Failure on the part of the Contractor to carry out the provisions of the Progress Schedule, as established, may be considered sufficient cause to prevent bidding future projects until a satisfactory rate of progress is again established.

Liquidated damages will be applied based on Section 108 of the 2012 Michigan Department of Transportation Standard Specifications for Construction.

Contractor's attention is hereby called to see the Coordination Clause in the proposal.

CITY OF DETROIT

SPECIAL PROVISION
FOR
WORKING AREA AND PROJECT CLEANUP

Revised: 3-22-2006

All the work under this Contract shall be in City streets, alleys, easements, or rights-of-way, and the space allowed for the Contractor's operations shall be in City streets and alleys adjacent to his work. Construction equipment, storage of materials, and the construction operations shall normally be restricted to such areas. Should additional working or storage space be desired, the Contractor may be permitted to utilize adjacent private property provided he makes all arrangements with the owners, bears all expense in connection with its use, and in no way involves or obligates the City or State by such use.

Materials delivered on the street shall be neatly and compactly piled in such manner as to cause the least inconvenience to adjacent property owners and the general public.

Working areas shall be promptly restored to their original condition as soon as the required construction work has been completed at the particular location, and shall not be used as a storage area for unneeded material or construction equipment.

The work and all property used in connection with the work shall be kept in a neat and orderly condition at all times. Waste material and refuse from the Contractor's operations may be temporarily piled behind the curb in a manner not to interfere with pedestrians. Waste materials, rubbish, and debris shall not be allowed to accumulate and shall be removed daily, as directed by the Engineer. Construction equipment and excess materials shall be promptly removed from the site as they become no longer needed for the progress of the work.

All cost relating to maintaining a neat working area and providing the required cleanup will not be paid for separately but shall be included in the total project cost.

CITY OF DETROIT

SPECIAL PROVISION
FOR
COORDINATION CLAUSE FOR HMA RESURFACING
AND
MISCELLANEOUS CONSTRUCTION

DET: **Revised: 01-31-12**

The Contractor shall coordinate his operations with others performing work within, or adjacent to, the Construction Influence Area (CIA), to avoid conflicts in maintaining traffic, construction signing, and progression of construction activities.

The Contractor's attention is called to the requirements of cooperation with others as covered in subsection 104.08 of the 2012 Michigan Department of Transportation Standard Specifications for Construction.

The Contractor will be required to coordinate his work with the curb-side garbage pick-up within the Construction Influence Area.

No claim for extra compensation or adjustments in contract unit prices will be allowed on account of delay or failure of others to complete work units scheduled.

CITY OF DETROIT

SPECIAL PROVISION
FOR
LIMITATIONS OF OPERATIONS
AND
ANTI-NOISE CONTROL

DET: UP **Revised: 05-12-12**

The following paragraphs shall be added to subsection 108.02 Limitation of Operation of the 2012 Michigan Department of Transportation (MDOT) Standard Specifications for Construction.

Overtime shall be limited to the work days submitted on the progress schedule for the project. The work days used to develop the progress schedule shall be Monday through Saturday and shall not include Sundays or City Holidays. Overtime work on Sundays and City Holidays shall be limited to emergency work necessary to safeguard the health and safety of the public.

The following are the current City Holidays: New Year's Day, Martin Luther King Jr. Birthday, Good Friday, Memorial Day, Independence Day, Labor Day, Election Day, Veterans Day, Thanksgiving Day, Day after Thanksgiving, Christmas Eve, Christmas Day, New Year's Eve and New Year's Day. The Contractor shall be responsible for confirming with the City Engineering Division, 9th Floor, Cadillac Tower Building, any amendments to this list of calendar dates designated as holidays for City of Detroit employees.

The Engineer may require the contractor to cease construction operations during times as may be determined to be in the interest of the public at no additional compensation or cost to the City.

Contractor shall suspend or limit their operations if work interfere with the City Sponsors Public events within project CIA (Construction Influence Area) at no additional compensation or cost to the City.

The Contractor may normally prosecute the work during the entire twenty-four (24) hours of any work day stated above, provided that he so conducts his operations as not to create a public nuisance nor disturb the peace. Operations outside normal working hours must be conducted in accordance with Local Ordinances, as outlined in Subsection 107.01 of the 2012 MDOT Standard Specifications for Construction.

CITY OF DETROIT

NOTICE TO BIDDER
FOR
UTILITY COORDINATION

DET: **Revised: 01-26-2012**

The contractor shall cooperate and coordinate construction activities with the owners of utilities as stated in Section 104.08 of the 2012 Michigan Department of Transportation (MDOT) Standard Specifications for Construction. In addition, for the protection of underground utilities, the contractor shall follow the requirements in Section 107.12 of the 2012 MDOT Standard Specifications for Construction. Contractor delay claims, resulting from a utility, will be determined based upon Section 108.08 of the 2012 MDOT Standard Specifications for Construction.

The existing utilities listed below and shown on the plans represent the best information available as obtained on our surveys.

This information does not relieve the Contractor of the responsibility to satisfy himself as to its accuracy, or of his responsibility in case utilities have been constructed or removed since the most recent surveys.

NAME AND ADDRESS OF OWNER	KIND OF UTILITY
Miss Dig Call three (3) working days before you dig 1-800-482-7171	All Underground Utilities
City of Detroit **Public Lighting Authority** 9449 Grinnell Detroit, MI 48213 Emergency 24 Hour service (313) 224-0500 Carolyn Davis (313) 267-7270	Street Lighting and Traffic Signals
City of Detroit **Detroit Water & Sewerage Department** J Madison Bldg. 1420 Washington Blvd. Detroit, MI 48226 Gang Song (313) 967-1508 Fax (313) 964-9560 Emergency (313) 267-7401 Email: song@dwsd.org	Inspector Water Mains & Sewers

DET: MCS

Revised: 01-26-2012

NAME AND ADDRESS OF OWNER		KIND OF UTILITY
City of Detroit **Traffic Engineering, D.P.W.** 2633 Michigan Avenue Detroit, MI 48207		Pavement Markings, Signs &Traffic Signals
Jubi Chackunkal Jubcha@detroitmi.gov	(313) 224-1315	
Kirit Patel patelki@detroitmi.gov	(313) 628-5641	
Sign Shop 2425 Fenkell Detroit, MI 48238 Willie Riley Fax	 (313) 628-2923 (313) 628-4966	Sign Removals & Installations
City of Detroit **Detroit Fire Department** 250 W. Larned Detroit, MI 48226 Chief Derek Segars Fax	 (313) 224-1311 (313) 224-1908	Fire Call Boxes and Fire Hydrants
City of Detroit **Detroit Police Department** 1300 Beaubien Detroit, MI 48226 (313) 224-4400		Police Call Boxes
DTE, Detroit Edison One Energy Plaza IGS Group, 518SB Detroit, MI 48226 Robin O'Connell Fax	 (313) 235-5632 (313) 235-9366	Electric Power
	(313) 237-9564	Exposed or Damaged Facilities

DET: MCS

Revised: 01-26-2012

NAME AND ADDRESS OF OWNER	KIND OF UTILITY
DTE, Michigan Consolidated Gas Company Data Integrity, 2nd floor 3200 Hobson Detroit, MI 48201 Barbara Saunders (313) 577-7435 Fax (313) 577-7498	Gas Main
1-800-477-4747	Exposed or Damaged Facilities
AT&T Metro East 100 S Main St, Suite 314 Mt Clemens, MI 48043-2374 Joe Sikoski (586) 466-6310	Telephone
Metro West 31100 Plymouth Rd, Room 301 Livonia, MI 48150-2104 John Crispin (734) 523-6880	For adjusting Frames and Covers
Detroit Thermal LLC 3575 E Palmer St Detroit, MI 48201 Ed LaRosa (313) 921-1922 Fax (313) 921-1972	Steam Lines
Comcast Cablevision 25626 Telegraph Rd Southfield, MI 48034 Glen Younglove (248) 809-2712 Fax (248) 809-2721 Glen_Younglove@cable.comcast.com	TV Cables

AT&T will require five to seven business days advance notice prior to adjusting frames and covers.

Contact DTE ten working days prior to the construction start date to coordinate adjustments for Detroit Edison manholes.

CITY OF DETROIT

SPECIAL PROVISION
FOR
UTILITY ACCESS & CROSSING,
RECLAIMED MATERIAL, MISC. MATERIAL REMOVAL,
HYDRANT USE, DEWATERING EXCAVATED AREAS,
MONUMENT DISTURBANCE, & WORK AREA CLEANLINESS

DET: NYS **Revised: 03-06-15**

WORK APPROVALS

Acceptance by the Michigan Department of Transportation of any or all Utility work under this contract will be conditioned upon approval by the appropriate Department of the City of Detroit.

UTILITY ACCESS

The contractor shall contact the utility owners, including the Detroit Fire and Police Departments regarding their facilities prior to starting the work. All utilities outlets and control fixtures shall be maintained in an accessible condition at all times.

ADJACENT UTILITIES

When proposed utilities cross or lay parallel to an existing or proposed utility, a vertical clearance of 12 inches and horizontal clearance of 42 inches shall be provided between the outside limits of their construction and the outside limits of the Public Lighting Department (PLD) or Detroit Water and Sewerage Department (DWSD) facility. PLD facilities include electrical conduits, communication conduits, and related structures. DWSD facilities include sewers, water mains, and related structures. If for any reason this clearance cannot be provided, the contractor shall notify the project engineer and proceed under his direction in an approved manner.

RECLAIMING SALVAGABLE MATERIAL

All salvageable material within the limits of this project and belonging to either privately or municipally owned utilities, which are to be reclaimed by its owner, will be indicated on the plans or in the proposal. The removal of such material shall be done by the owner and at their own expense and at such time as will cause no delay to the Contractor. If after due notice the owner does not remove the material, the Engineer shall advise the Contractor to remove the material and this material shall become the property of the Contractor. The work of removing the material is included in the construction of the project and will not be paid for separately

HYDRANTS AND WATER

The Contractor shall pump out at the end of each day throughout the year, regardless of the season, any fire hydrant used to obtain water.

The Contractor shall secure the required permit from the Detroit Fire Department and the Detroit Water and Sewerage Department, and shall bear all the expense for such permits and for the water used. If connections are made to hydrants, Fire Department's standard hydrant wrench shall be used for the operation of the hydrant.

The Fire Department requires a fee deposit of $200 and a fee of $40/day for hydrant usage. These rates may change. Contact the Fire Department for information at (313) 596-2975.

The DWSD charges a variable rate. Contact DWSD for rate information at (313) 245-1057.

USE OF BALL TYPE PAVEMENT BREAKER FOR REMOVAL OF MISCELLANEOUS STRUCTURES

The use of a crane and ball type pavement breaker for the removal of miscellaneous structures referred to in Section 204 of the 2012 Standard Specifications and the removal of other items called for in these Supplemental Specifications will **NOT** be permitted at any time for work under this Contract, except when specifically authorized by the Engineer.

PUMPING AND DRAINAGE

The Contractor will be required to furnish all equipment and supplies and perform all labor necessary to keep all excavated areas dewatered during the period of his contract.

The work will include the disposal of all drainage water flowing into the excavation. The drainage of the entire project shall be disposed of in a manner that will not interfere with or delay the work of others. This work shall be performed as directed by the Engineer.

The City will permit, subject to its approval, drainage water from the excavations for the project to enter existing operating sewers without reimbursement. No claims for damages, however, will be allowed the Contractor because of the inadequacy of the City sewers to accommodate the water from the excavations.

All sewers and drainage structures shall be kept thoroughly cleaned of silt, debris and foreign matter, and shall be free from such accumulation at the time of final inspection.

The work of pumping and cleaning the structures specified will be considered included to the construction of the project and no additional payment will be made therefor.

PROPERTY AND SURVEY MONUMENTS

Before any monuments or stakes marking the boundaries of property along or near the work are removed or disturbed, the Contractor shall notify the Engineer in sufficient time so that they can be properly located and reset.

All precautions shall be taken to avoid disturbance of permanent survey monuments of any City, County or State authority, and when any of these are disturbed or destroyed, the Contractor shall restore them to the satisfaction of such authority and shall pay all costs incurred by such authority in connection therewith.

CLEANLINESS OF THE WORK

The Contractor shall at all times keep the street pavement and right-of-way and any public or private premises temporarily occupied by him for purposes of work under this contract free from accumulations of waste material or rubbish caused by his employees or the work. The requirement shall apply to any streets in vicinity of the work which are affected by the Contractor's construction or hauling operations, as well as to streets in which the work is located. If the Contractor shall fail to keep any street cleaned of debris resulting from his operations, and therefore shall create any public nuisance, he shall be notified in writing by the Engineer to clean the street and remove the nuisance immediately. If, within 24 hours after the receipt of such notice, the contractor shall fail to clean such street satisfactorily, the Engineer shall order the street cleaned by the Department of Public Works or such other agency as he shall designate and all costs of such cleaning shall be paid by the Contractor.

Materials and equipment not in current use shall not be stored on any city streets. Storage of materials on private property shall require a written agreement with the owner. The Contractor shall provide the Engineer a copy of the agreement.

CITY OF DETROIT

SPECIAL PROVISION
FOR
EXCAVATION, EARTH, MODIFIED

DET:UP Revised: 07-24-14

Description. This work consists of excavating materials not otherwise included into other pay items. This work will be done in accordance with Section 205 of the 2012 Michigan Department of Transportation (MDOT) Standard Specifications for Construction, except excavation and disposal of debris and non hazardous material when encountered, shall not be paid for separately. Experience has shown that most or all of earth excavation may be debris and may require hauling to special disposal sites which will accept this type of material.

Measurement and Payment. "Excavation, Earth, Modified" will be measured per cubic yards. The contract unit price will be payment in full for furnishing all labor, equipment, and materials necessary to excavate and dispose of the material. Where masonry and concrete structures and heavy foundations are encountered, their removal will be paid for as specified for these items.

Pay Item	Pay Unit
Excavation, Earth, Modified	Cubic Yard

CITY OF DETROIT

SPECIAL PROVISION
FOR
HMA CONCRETE PAVEMENT
SEQUENCE OF OPERATIONS

DET: UP **Revised: 07-24-14**

Once work on a street has begun, the Contractor shall maintain a continuous operation.HMA top course shall be placed only after all base repairs, concrete curb removals and replacement, structure adjustments and repairs are completed. All milled pavement surfaces shall be completely resurfaced with leveling and top courses before the seasonal shutdown for the winter. All milled surfaces shall be completely resurfaced with leveling course as soon as possible but not to exceed 48 hours from the milling unless specifically approved otherwise by the Engineer. Contractor shall provide temporary wedges at driveways and at raised structure covers until HMA top course is completed at no additional or separate cost to the project. Cost of such task shall be considered included in HMA pay items and/or Maintenance of Traffic. If the contractor fails to provide such temporary wedges, then the Project Engineer can have it done by other means available and entire cost including time any administrative cost shall be charged back to the Contractor and deducted from any payment due to the Contractor.

CITY OF DETROIT
SPECIAL PROVISIONS
FOR
COLD MILLING HMA SURFACE, MODIFIED

DET: UP **Revised: 07-24-14**

Description This work shall consist of removing HMA pavement or surface by use of cold-milling equipment to prepare the foundation for HMA overlays per section 501.03 of the 2012 Michigan Department of Transportation (MDOT) Standard Specifications for Construction and as specified herein.

The cost of exploration for the existing street car rails when encountered during cold milling shall be included in the work of cold milling HMA surface. Extra payment for cost of actual removal and disposal of any street car rail will be made per section 103.02

The Contractor shall schedule the cold-milling operation so that entire lane width of the roadway is cold milled between road terminus limit before switching over to other lane/side. This is required to avoid having a vehicle travel over milled surface on one side and normal pavement surface other side.

At the end of the day, the Contractor shall place a wedge, a minimum of 6 feet wide, the full length of all transverse and longitudinal joints at intersections where milling is greater than 2 inches in depth, to provide a smooth transition onto and off of the milled surface.

It is the Contractor's responsibility to establish the finish (final) grade on all streets and to ensure proper (positive) drainage at all locations. This work shall be included in the cold milling and HMA paving pay items. No separate payments will be made for this work.

Measurement and Payment The completed work as measured for "Cold Milling HMA Surface, Modified" will be paid for at the contract unit price for the following contract pay item.

Cold milling of existing concrete patches, and establishing finish (final) grade to ensure proper drainage, the cost of exploration for an existing street car rail when encountered during cold milling and wedging for longitudinal and transverse transition when required is included in the work of "Cold Milling HMA Surface, Modified".

The price shall be payment in full for removing the HMA material to the depth specified on the typical cross section sheet, and for transportation and disposal of the material.

Pay Item	Pay Unit
Cold Milling HMA Surface, Modified	Square Yard

CITY OF DETROIT

SPECIAL PROVISION
FOR
HMA APPLICATION ESTIMATE

DET: UP **Revised: 05-12-12**

The HMA Top Surfacing Mixture 5E3 shall have a yield of 165 pounds per square yard with an estimated thickness of 1.5 inches.

The HMA Leveling Surfacing Mixture 4E3 shall have a yield of 220 pounds per square yard with an estimated thickness of 2 inches.

Performance Grade; PG 64-22

The Material for HMA Approach, Modified shall be HMA Mixture 1.5 inches of 5E3 and 2 inches of 4E3, having a yield of 385 pounds per square yard.

The Material for Hand Patching shall be 3 inches minimum of HMA Mixture 5E3, having a yield of 330 pounds per square yard (or as directed by the Engineer).

HMA Shoulder, Modified shall be HMA Mixture 3 inches of 5E3, having a yield of 330 pounds per square yard. The material shall be placed in two lifts of approximately 1.5 inches.

HMA Prime Coat and HMA Bond Coat shall be included in the HMA pay item and shall meet the requirements specified in Section 904 of the 2012 MDOT Standard Specifications for construction.

The aggregate wear index shall be 260.

CITY OF DETROIT

SPECIAL PROVISION
FOR
CONDITIONING EXISTING PAVEMENT, MODIFIED
1 of 1

DET: **Revised: 02-09-12**

Description. This work shall be in accordance with Subsection 501.03.C of the 2012 Michigan Department of Transportation Standard Specifications for Construction except the Removing HMA Patches, Joint and Crack, Cleanout, and Pavement Joint and Crack Repair, Detail 7 shall not be separate pay items but shall be included in the work of "Conditioning Existing Pavement, Modified" and will be done as directed by the Engineer.

Measurement and Payment. "Conditioning Existing Pavement, Modified" will be measured and paid for by the ton of HMA material placed. The contract price per ton will be payment in full for furnishing all labor, material and equipment required to remove deteriorated or unstable material to clean the pavement surface and apply any bonding material needed and to furnish, place and compact the HMA mixture to prepare the existing pavement for surfacing. HMA Patch, Remove; Joint and Crack, Cleanout; and Pavement Joint and Crack, Repair, Detail 7 will not be paid for separately but are included in the item of work "Conditioning Existing Pavement, Modified".

Full depth Pavement Joint and Crack Repair, Detail 8 is not included in the item of "Conditioning Existing Pavement, Modified".

Pay Item	Pay Unit
Conditioning Existing Pavement, Modified	Ton

CITY OF DETROIT

SPECIAL PROVISIONS
FOR
HMA APPROACH, MODIFIED

DET: UP **Revised: 07-24-14**

Description. "HMA Approach, Modified" shall conform to the requirements of Section 501 of the 2012 Michigan Department of Transportation Standard Specifications for Construction. The work shall include the construction of Butt Joints when meeting existing pavements and will not be paid for separately. The depth of the Butt Joints shall be as directed by the Engineer.

Materials. The HMA mixture for the HMA Approach shall be that specified in the Special Provision for HMA Application Estimate. The HMA mixture to be used for the Butt Joint shall be that used for the leveling HMA mixture as specified in the Special Provision for HMA Application Estimate.

Measurement and Payment. "HMA Approach, Modified" will be measured per ton. The contract unit price shall include all labor, material and equipment necessary to furnish, place and compact the HMA Approach, Modified as shown on the plans or as directed by the Engineer.

Pay Item	Pay Unit
HMA Approach, Modified	Ton

MICHIGAN
DEPARTMENT OF TRANSPORTATION

SPECIAL PROVISION
FOR
ACCEPTANCE OF HMA MIXTURE ON LOCAL AGENCY PROJECTS

a. Description. This special provision provides acceptance testing requirements for use on local-agency-projects that do-not-include-the-quality control/quality-assurance special-provision. The HMA mixture provided must meet the requirements of the standard specifications, except where modified herein.

b. Materials. Provide a mixture of aggregates, mineral filler (if required), and asphalt binder proportioned to be within the master gradation limits shown in the project documents, and meeting the uniformity tolerances listed in Table 1. The master gradation range is to be used for establishing mix design only. Topsoil, clay, or loam can not be added to aggregates which are to be used in plant mixed HMA mixtures.

c. Construction. After the job-mix-formula (JMF) is established, the aggregate gradation and the binder content of the HMA mixture furnished for the work must be maintained within the Range 1 uniformity tolerance limits permitted for the JMF specified in Table 1. However, if deviations are predominantly either below or above the JMF, the Engineer may order alterations in the plant to bring the mixture to the JMF. If two consecutive aggregate gradations on one sieve, or binder contents as determined by the field tests, are outside Range1 but within Range 2 tolerance limits, the Contractor must suspend all operations. Contract time will continue during these times when the plant is down. Before resuming any production, the Contractor must propose, for the Engineer's approval, all necessary alterations to the materials or plant so that the JMF can be maintained. The Engineer will evaluate the alterations for there effects on AWI and mix design properties and will approve or disapprove the alterations.

The Engineer will perform acceptance sampling and testing. Each day of production, a minimum of two samples will be obtained for each mix type. Acceptance testing will be performed at the frequency specified by the Engineer. No less than three samples will be obtained for each mix type. Quality control measures to insure job control are the responsibility of the Contractor.

The crushed particle content of the aggregate used in the HMA mixture must not be more than 10 percentage points above or below the crushed particle content used in the JMF nor less than the minimum specified for the aggregate in the contract.

Establish a rolling pattern that will achieve the required in place density. The Engineer will measure pavement density with a Nuclear Density Gauge using the Gmm from the JMF for the density control target. The required in place density of the HMA mixture must be 92.0 to 96.0 percent of the density control target.

Table 1: Uniformity Tolerance Limits for HMA Mixtures

PARAMETER	TOP & LEVELING COURSE		BASE COURSE	
	Range 1(a)	Range 2	Range 1(a)	Range 2
Binder Content	± 0.40	± 0.50	± 0.40	± 0.50
% Passing # 8 and Larger Sieves	± 5.0	± 8.0	± 7.0	± 9.0
% Passing # 30 Sieve	± 4.0	± 6.0	± 6.0	± 9.0
% Passing # 200 Sieve	± 1.0	± 2.0	± 2.0	± 3.0

a. This range allows for normal mixture and testing variations. The mixture must be proportioned to test as closely as possible to the Job-Mix-Formula.

d. Rejected Mixtures. If for any one mixture, two consecutive aggregate gradations on one sieve or binder contents as determined by field tests exceed the uniformity tolerance of Range 2 under Table 1, or do not meet the minimum requirements for crushed particle content specified in the project documents, the mixture will be rejected. If such mixtures are placed in a pavement, the remaining portions of the failing field samples (split sample) will be sent to the MDOT Central Laboratory to confirm the field test results. If the Laboratory's results do not confirm the field test results and there are no price adjustments required due to test failures on the asphalt binder, then no price adjustments will be made for the mixture involved. If the Laboratory's results confirm the field test results and if, in the Engineer's judgment, the defective mixture can remain in place and there are no price adjustments required due to test failures on the asphalt binder, the contract unit price for the defective mixture involved, as determined from field tests, will be decreased on the following basis:

> The contract unit price for material outside of Range 2 or with a crushed particle content below that specified in the project documents will be decreased 25 percent.

If three consecutive aggregate gradations on one sieve, or bitumen contents as determined by field tests are outside Range 1 but within Range 2 tolerance limits, the mixture produced from the time the third sample was taken until the gradation, or bitumen content is corrected back into Range 1 will be decreased in contract unit price by 10 percent. Field tests indicating that mixtures are subject to the 10 percent penalty will be confirmed in the same manner as mixtures subject to the 25 percent penalty as described herein.

CITY OF DETROIT

SPECIAL PROVISION
FOR
CURB, REM, MODIFIED

DET: UP **Revised: 02-14-2014**

Description. The work shall be done in accordance with the applicable provisions of Section 204 of the 2012 MDOT Standard Specifications for Construction except as modified herein.

This work consists of removing curb, whether separate or integral with the pavement where the adjoining pavement remains. Where the curb is integral with the pavement, saw cutting of the existing pavement 2 feet from face of curb will be required. Saw cutting and removal of pavement integral with the curb that is required to be removed, are included into the curb removal and will not be paid for separately. Removing curb shall also include earth excavation required for removing the existing curb.

When an existing stone curb is removed, the removal shall also include the concrete backing located behind the curb and/or the concrete base on which the stone curb rests. Removal of this concrete is included in the curb removal and will not be paid for separately.

Backfill base material removed with the concrete curb with Granular Material, Class II to level necessary for new curb. Any Pavement area removed shall be back fill with aggregate to level necessary for new pavement. Backfill other area around curb with Sound Earth or material excavated from site only if approved by the Engineer. Place backfill in no more than 6 inches layer and compact to at least 95 percent of maximum unit weight. The cost of all backfill material, Granular Material Class II, Aggregate or Sound Earth or any other approved material is included in the unit price of related pay items for new curb new and will not be paid separately.

Selected excavated material, suitable for backfill, will be free from rubbish or debris, organic matter, large stones, concrete fragments, or other road material, lumber, tree roots, or branches. In general, selected excavated material to be suitable for backfill will be restricted to sand or crumbly clay. Blue clay is not considered a suitable backfill material. If there is not sufficient selected excavated material on the project, the contractor shall provide the needed fill material and no additional payment will be made for providing this backfill.

Lawn Sprinkler Systems, if encountered, shall be protected by the Contractor at no extra cost. If lawn sprinkler system is broken or cut, the contractor shall stake the end of the lawn sprinkler pipe.

Measurement and Payment. The completed work as measured for **"Curb, Rem, Modified"** will be paid for at the contract unit price for the following item

Pay Item	Unit
Curb, Rem, Modified	Foot

CITY OF DETROIT

SPECIAL PROVISION
FOR
INTEGRAL CURB AND SIDEWALK, 2 FEET, REM, MODIFIED

DET: UP **Revised: 05-12-12**

The work shall be done in accordance with Section 204 of the 2012 Michigan Department of Transportation Standard Specifications for construction and as specified herein.

This work shall consist of removing existing curb that has integral sidewalk as part of the curb structure. Saw cut existing sidewalk at 2 feet distance from the curb if there does not exist any joint within approximate five(5) distance from curb to remove curb and integral sidewalk. Any additional sidewalk to be removed will be paid for as Sidewalk, Rem.
The cost for any saw cutting is considered included in the pay item of this work and no additional payment for it will be made.

Measurement and Payment. Integral Curb and Sidewalk, 2 Feet, Rem, Modified will be measured and paid for at the contract unit price per foot.

Pay Item	Pay Unit
Integral Curb and Sidewalk, 2 Feet, Rem, Modified	Foot

The cost for any saw cutting is considered included in the pay item of this work and no additional payment for it will be made.

CITY OF DETROIT
SPECIAL PROVISION
FOR
CURB, CONC, DETAIL CD, MODIFIED and

DET: UP Revised: 07-24-14

Description. The work consists of constructing curb in accordance with Section 802 of the 2012 Michigan Department of Transportation Standard Specifications for Construction except as modified herein.

Construction.

1. Construct a separate type curb per MDOT Standard Plan R-30, Detail E when the existing curb is not integral with sidewalk except that match existing curb depth, top curve radius (usally 1"R), batter (usally 1") and no lane ties are required, and

Restore areas disturbed, to their original condition. Existing berm areas shall be restored with like replacement. No separate payment will be made for such restoration but is considered part of work item.

Protect lawn sprinkler systems, if encountered. All costs associated with the lawn sprinkler protection, restoration and repair, if damaged, will be borne by the Contractor and no separate payment will be made.
Any excavation and backfill necessary for this work shall be included in the cost for this Item of work and no separate payment shall be made.

Measurement and Payment. The completed work as described herein for concrete curb, which includes a separate curb or a curb with integral sidewalk, will be measured by the foot. The contract unit price will be payment in full for furnishing all materials, labor and equipment necessary to construct the curb. Any excavation and backfill necessary for this work shall be included in the cost for this Item of work and no separate payment shall be made.

Pay Item	Pay Unit
Curb, Conc, Detail CD, Modified	Foot

CITY OF DETROIT

SPECIAL PROVISION
FOR
INTEGRAL CURB AND SIDEWALK, 2 FEET, MODIFIED

DET: UP **Revised: 03-14-2013**

DESCRIPTION:

This work shall consist of the construction of an Integral Curb and Sidewalk in accordance with details shown on the plans or as directed by the Engineer, and shall conform to the requirements of Section 803 of the 2012 Michigan Department of Transportation Standard Specifications for Construction.

The work shall include all labor, material, and equipment necessary to construct the Integral Curb and Sidewalk, 2 Feet, Modified. Earth Excavation, backfill with granular material, an expansion joint and other items which may be required shall be considered included in the construction of Integral Curb and Sidewalk, 2 Feet, Modified. Removal of the existing curb and sidewalk and/or existing integral curb and sidewalk will be paid separately.

Where there is a stepped curb, the Integral Curb and Sidewalk, 2 Feet, Modified shall be constructed to meet the face of the step curb. The exact height of the curb face and the width of the Integral Curb and Sidewalk will vary depending upon the field conditions and shall be constructed as directed by the Engineer. Where the difference between the sidewalk and gutter elevations is less than 7 inches, the Integral Curb and Sidewalk shall be constructed to eliminate the step.

METHOD OF MEASUREMENT AND BASIS OF PAYMENT:

"Integral Curb and Sidewalk, 2 Feet, Modified" will be measured and paid for per lineal foot.

Pay Item	Pay Unit
Integral Curb and Sidewalk, 2 Feet, Modified	Foot

CITY OF DETROIT

SPECIAL PROVISION
FOR
SIDEWALK, CONC, __ INCH, MODIFIED

DET-UP Revised: 01- 04-2012

Description. The work consists of constructing concrete sidewalk of the thickness specified, in accordance with Section 803 of the 2012 Michigan Department of Transportation Standard Specifications for Construction, Special Detail R-29 series and this special provision.

Construction. Construct all sidewalks with a normal cross slope of 2.00 % (1/4 inch per feet) sloping down towards the street but not less than 1.00 % minimum when existing conditions prevent from having normal slope.

Construct concrete sidewalk to a minimum 4-inch thickness at all locations called for, with the following exceptions:

Construct 6-inch thick concrete sidewalk for residential driveway area, the first flags of sidewalk adjacent to commercial driveways and alley pavements;

Construct 6-inch thick concrete sidewalk for a 3 feet minimum width from the face of curb at street returns. The Engineer will determine the limit of this item so that unusual jointing with the adjacent 4-inch thick sidewalk does not occur.

Restore area disturbed beyond actual sidewalk repair limits to its original conditions. Existing berm area shall be restored with like replacement. No separate payment will be made for such restoration but is considered part of work item.

Any excavation or granular backfill 4 inches or less required to construct the walk shall be included in this item of work and will not be paid for separately.

Sidewalk Joints
All sidewalk joints shall be constructed in accordance with the applicable provisions of Subsection 803.03 D of the 2012 MDOT Standard Specifications and Special Detail R-29 series except as modified herein.

Where hydrants or utility pole are located within the sidewalk area, a 3-feet knockout squared centered on hydrant or utility pole shall be constructed with full depth ½-inch expansion paper and a 30-pound felt paper shall be wrapped around the hydrant or utility pole at contact with concrete.

CITY OF DETROIT

SPECIAL PROVISION
FOR
SIDEWALK, CONC, __ INCH, MODIFIED

DET-UP **Revised: 07-24-14**

Measurement and Payment. The completed work for **"Sidewalk, Conc, __inch, Modified"** of the thickness specified will be measured and paid for at the contract unit price for the following items. Any excavation or granular backfill 4 inches or less required to construct the walk shall be included in this item of work and will not be paid for separately.

Pay Item	Pay Unit
Sidewalk, Conc, 4 inch, Modified	Square Foot
Sidewalk, Conc, 6 inch, Modified	Square Foot

CITY OF DETROIT

SPECIAL PROVISION
FOR
SIDEWALK, CONC WITH TREE ROOTS, 4 INCH
SIDEWALK, CONC WITH TREE ROOTS, 6 INCH

DET: MCS/up **05-12-12**

Description " Sidewalk, Conc with Tree Roots, 4 inch" or" Sidewalk, Conc with Tree Roots, 6 inch" is designated for the sidewalk replacement which has been raised by tree roots and requires trimming of the tree roots in conjunction with the sidewalk replacement, as directed by the Engineer.

This item of work includes: Cutting and removing tree roots, removing wood chips and all debris material properly disposed of off site; backfilling, compacting, and grading of the removal area; and construction of concrete sidewalk.

Concrete sidewalk of the thickness specified shall be constructed in accordance with Section 803 of the 2012 Michigan Department of Transportation Standard Specifications for Construction and the City of Detroit Special Provision for Sidewalk, Conc, ___inch, Modified. Sidewalk cross slopes shall be between 1% and 2% sloping down towards the street.

Method of Measurement and Basis of Payment. "Sidewalk, Conc with Tree Roots, 4 inch" of the type specified shall be measured in square foot.

Payment shall be for the entire flag or flags of sidewalk affected by tree roots. The contract unit price "Sidewalk, Conc with Tree Roots, 4 Inch" is full compensation for all work required to complete this pay item, including all labor, equipment and material.

Pay Item	Pay Unit
Sidewalk, Conc with Tree Roots, 4 inch	Square Foot
Sidewalk, Conc with Tree Roots, 6 inch	Square Foot

CITY OF DETROIT

SPECIAL PROVISION
FOR
SIDEWALK RAMP, ADA, MODIFIED and
DETECTABLE WARNING SURFACE TILE, MODIFIED

DET-UP **Revised: 01-04-2012**

Description: This special provision covers construction of sidewalk ramp with detectable warning surface and or Retrofitting existing sidewalk or sidewalk ramp with detectable warning surfaces.

The work consist of constructing sidewalk ramp and/or retrofitting ramp with detectable warning surface in accordance with the applicable provisions of Section 803 of the 2012 MDOT Standard Specifications for Construction and the current MDOT Standard Plan R-28 Series except as modified herein.

Complete this work in conformance with the American with Disability Act (ADA) provisions as applicable.

Material: The Detectable Warning Surface color shall be will be brick red, federal color number 22144, unless otherwise approved by the Engineer. The color shall be homogeneous throughout the tile

Construction: Construct sidewalk ramp(s), landings and flares six inches in thickness. Install detectable warning surface according to the manufacturer's instructions and the current MDOT Standard Plan R-28 Series.

The curb and gutter section at the bottom of the ramp (ramp opening) shall be a full depth curb and have a minimum depth of 12 inches.

It is also the Contractor's responsibility to incorporate any changes made to the ADA accessibility requirements that may take effect prior to the start date of actual construction. If the Contractor determines that any changes significantly alter the original bid cost, the Contractor may submit a written request to the Engineer or his representative for approval and compensation. Include a cost comparison between the original bid cost and the cost of the ADA required changes in the request.

The contractor shall stamp all concrete with a legible stamp bearing the name of the company and the year of construction. No sidewalk or ramp construction shall commence without a Contractor's stamp on site.

CITY OF DETROIT

SPECIAL PROVISION
FOR SIDEWALK RAMP, ADA, MODIFIED and
DETECTABLE WARNING SURFACE TILE, MODIFIED
2 OF 2

DET-UP **Revised: 01-04-2012**

Measurement and Payment: The completed work as described herein for Sidewalk Ramp, ADA, Modified which includes Detectable Warning Surface Tile, Modified will be measured by as square feet and feet respectively. The contract unit price will be payment in full for furnishing all materials, labor and equipment necessary to construct the curb

Pay Item	Pay Unit
Sidewalk Ramp, ADA, Modified	Square Foot
Detectable Warning Surface Tile, Modified	Foot

Sidewalk Ramp, ADA, Modified will be measured by the area of the ramp, flares, and monolithic rolled curbs along the longitudinal edges of the ramp, and the curb or the curb integral with pavement at the bottom of the ramp.
The landing shall be paid as 4 inch or 6 in regular sidewalk.

Payment includes all labor, materials, and equipment required to construct the sidewalk ramp pavement including the landing, flares, and monolithic rolled curbs along the longitudinal edges of the ramp, and the curb or the curb integral with pavement, at the bottom of the ramp. Any excavation or granular backfill required to construct sidewalk ramps will be included in this item of work and will not be paid for separately.

Restore berm areas disturbed beyond sidewalk ramp repair limits to its original conditions. No separate payment will be made for such restoration but is considered part of work item.

Replacement of all sidewalk, curb, or curb integral with pavement outside the area measured for "Sidewalk Ramp, ADA, Modified" will be paid for separately.

Detectable Warning Surface Tile, Modified will be measured in feet.. Payment includes the detectable warning surface tile(s) and all labor, materials, and equipment to install the detectable warning surface for a Sidewalk Ramp, ADA, Modified.

If the Contractor elects to remove the existing concrete sidewalk or sidewalk ramp in conjunction with retrofitting a Detectable Warning Surface Tile, Modified, the unit price for a **Detectable Warning Surface Tile,** Modified will include the cost of removing sidewalk, sidewalk ramp and restoration.

Any constructed ramps that do not meet the current MDOT Sidewalk Ramp Standard Plans and the latest ADA accessibility requirements will be removed and replaced by the Contractor, as directed by the Engineer or his representative, at the Contractor's expense

CITY OF DETROIT

SPECIAL PROVISION
FOR
PAVT REPR, REM, MODIFIED
CONCRETE PAVEMENT, MODIFIED
AND CONCRETE BASE PAVEMENT, MODIFIED

DET: UP Revised: 01-22-15

Description This work shall consist of constructing and or restoring a concrete pavement or a concrete base pavement, with or without reinforcement and with or without an integral curb in accordance with Section 602 or 603 of the 2012 Michigan Department of Transportation (MDOT) Standard Specifications for Construction as applicable and as specified herein.

All joints including lane ties, dowels, sawing, sealing joints with hot-poured rubber to finish the pavement construction and/or restoration shall be included in the item of work. No separate payments will be made for these works.

Pavement Repair, Removal, Modified shall be the removal of pavement sections without disturbing the base, as shown on the plans. The unit price for Pavt Repr, Rem, Modified includes the cost of the following:

1. Moving from repair to repair;
2. Saw cutting;
3. Removing adjacent concrete shoulders, curb, curb and gutter, and valley gutter
4. Removing part-depth or full-depth HMA patches;
5. Lifting the repair section without disturbing the base;
6. Loading, hauling, and disposing of the removed material; and
7. Placing HMA mixture, as necessary, to restore the shoulders to the existing line and grade.

Measurement and Payment Conc Base Pavt, Conc Pavt and Conc Pavt Misc, of the thickness specified, with or without reinforcement and with or without Integral Curb and Pavt Repr, will be measured by area in square yards including the area occupied by the curbs.

Pay Item	Pay Unit
Conc Base Pavt, __ inch, Modified	Square Yard
Conc Base Pavt with Integral Curb, Reinf, __ inch, Modified	Square Yard
Conc Base Pavt with Integral Curb, Nonreinf, __ inch, Modified	Square Yard
Conc Pavt with Integral Curb, Nonreinf, __ inch, Modified	Square Yard
Conc Pavt with Integral Curb, Reinf, __ inch, Modified	Square Yard
Conc Pavt, Misc, Nonreinf, 6 inch, Modified	Square Yard
Conc Pavt, Misc, Nonreinf, 8 inch, Modified	Square Yard
Conc Pavt, Misc, 8 inch, Reinf, Modified	Square Yard
Conc Pavt, Misc, 10 inch, Reinf, Modified	Square Yard
Driveway, Conc, 8 inch, Reinf, Modified	Square Yard
Pavt Repr, Rem, Modified	Square Yard
Pavt Repr, Nonreinf Conc, 10 inch, Modified	Square Yard

CITY OF DETROIT
SPECIAL PROVISION
FOR
DR STRUCTURE COVER, ADJ, CASE __,MODIFIED and
RECONSTRUCT DR STRUCTURE, CASE __,MODIFIED
WATER SHUTOFF, ADJ, MODIFIED

DET: UP Revised: 07-14-2014

Description. The work consists of Adjusting Drainage Structure Covers in accordance with the applicable provisions of Section 403 of the 2012 MDOT Standard Specifications for Construction except as modified herein.

Drainage Structure Cover Adjustment will include all Public Lighting Department manholes, all water main gate wells, sewer manholes and catch basins whose covers are raised or lowered to meet the required elevations. Water Shutoff Adjustment will include water shutoff boxes or stop boxes, Public Lighting Department hand holes being raised or lowered to meet required elevations.

Before starting this work the Contractor and the Engineer, or his designate, shall jointly inspect each structure to evaluate its interior conditions. Access to structures will be provided by the Contractor. The Engineer, or his designate, shall determine whether the structure is to be adjusted or reconstructed. The Engineer shall also determine if any structure cleaning is necessary to remove existing debris. The Contractor shall remove all debris from the structure resulting from the contractor's operation.

The existing frame and cover shall be carefully removed and the upper portion of the existing manhole structure repaired as necessary and raised or lowered as required. The frame and cover shall then be reset on the adjusted structure so as to fit the required grade and cross section.

Where the structure is in need of repair, as determined by the Engineer, within the limits provided for under these items, it will be broken down and rebuilt with new materials to the required elevation.

Payment for **"Dr Structure Cover, Adj, Case___, Modified"** shall include all labor, material and equipment necessary to raise or lower existing structure rim involving adjustment (addition and/or removal), repair or replacement of less than five (5) layers of bricks or three (3) layers of concrete blocks, both including mortar, regardless of whether or not it is necessary to remove cone section to accommodate the rim adjustment.

Payment for **"Reconstruct Dr Structure, Case___, Modified"** shall include all labor, material and equipment necessary to raise or lower existing structure rim involving adjustment (addition and/or removal), repair or replacement of more than five (5) layers of bricks or three (3) layers of concrete blocks, both including mortar, and may include removal of cone section to accommodate the rim adjustment.

Construction. Where called for on the plans or authorized by the Engineer, existing structures cover shall be adjusted to the proper elevation in accordance with Section 403 of the 2012 MDOT Standard Specifications for Construction except as modified herein.

Remove adjacent pavement, curb, curb and Gutter or sidewalk as necessary to adjust the castings. Remove an opening at least a 5 feet x 5 feet opening in conjunction with adjusting the

casting. Sawcut the existing pavement, curb and curb and gutter for removal. Saw cut the existing pavement full depth around the opening. Raise the covers to the proper elevation by supporting it on brick masonry, so constructed as to hold them firmly in place, or lowered to the proper elevation and reset on full mortar bed. Replace adjacent pavement, curb, or curb and gutter to match existing grades or to the required new elevation.

Non-ferrous handhole covers used by Public Lighting Department and other City Utilities are made of fiberglass, copolymer propylene or similar material. These covers shall be adjusted by a qualified electrical contractor. The removal of concrete around the perimeter of a non-ferrous handhole shall be done with light chipping hammers to insure that no damage is done to the cover, handhole or any conduit or other utility that may feed the structure. Any damage to structures, conduits, cable, and etcetera shall be repaired by the Contractor at no cost to the City.

For HMA pavement sections, immediately before placing the HMA top course or overlay, make final adjustments to drainage structure covers. Equipment will not be permitted to operate over adjusted structures any sooner than 24 hours after their completion, unless otherwise approved by the Engineer.

Measurement and Payment. The completed work as described for Adjusting Drainage Structure Covers will be measured as units and will be paid for at the contract unit price as follow, which price will be payment in full for furnishing all materials and labor, fittings; pavement, curb, curb and gutter, and sidewalk removal and replacement, excavation, backfilling, disposal of surplus material, removal of all debris and foreign material from the structure (including the sump); and adjusting the structure cover to the required elevation, with the existing or new cover, and providing access to all structures for inspection, as directed by the Engineer.
Structure damage, due to contractor operations shall be repaired at the Contractors expense.
A finish concrete collar shall be placed around any structures adjusted within 5 feet of the Detroit Thermal (formerly Detroit Edison) steam lines, as directed by the Engineer. The cost of this shall be paid separately as Concrete Repr, Nonreinf Conc, 10 inch , Modified measured surface area of the concrete collar.

Pay Item	Pay Unit
Dr Structure Cover, Adj, Case 1, Modified	Each
Dr Structure Cover, Adj, Case 2, Modified	Each
Reconstructing Dr Structure, Case 1, Modified	Each
Reconstructing Dr Structure, Case 2, Modified	Each
Water Shutoff, Adj, Modified	Each
Concrete Repr, Nonreinf Conc, 10 inch , Modified	Syd.

CITY OF DETROIT

SPECIAL PROVISION
FOR
DR STRUCTURE COVER, MODIFIED

DET: A.A. **Revised: 2/20/14**
3/12/12

a. Description. Existing catch basins, manholes, handholes, gate valve wells and other similar structures, which are located within the area of the proposed pavement or existing pavement which is to be retained, that have defective or worn frames and covers, on structures which are to remain in service, shall have new frames and covers supplied and installed by the Contractor.

b. Materials. Catch basin and manhole frames and covers shall be gray iron casting, A.S.T.M. A48, Class No. 30B. Castings shall be sound, true to form and thickness, clean and neatly finished. The seating face on covers and grates and the corresponding seat on the frame shall be machine finished so that there will be even bearing at all points with no rocking or tilting. The frame and its cover or grate shall constitute one unit. Each unit shall conform to the detailed requirement of the respective Standard Drawings.

The castings for catch basins shall be as follows:

East Jordan 5000 Assembly or Approved Equal
Product Number. 00500063B01; Weight. 219 Lb
Product Number. 00500063B02; Weight 241 Lb

The castings for drainage manholes shall be as specified in the Material Section of the Special Provision for Drainage Structures and the Standard Plan for Manhole Frame and Cover.

East Jordan Assembly: 00104051L01 or Approved Equal

The castings for gate valve wells shall be as specified in the Standard Plan for Gate Well Frame and the Cover Standard.

East Jordan Assembly 0014050L01 or Approved Equal

The castings for Public Lighting Commission (PLC) manholes shall be as specified in the Standard Plan for P.L.C. Pattern No. 2A Street Type Cover.

Public Lighting Department (PLD) handhole and manhole frames and covers shall be labeled "Public Lighting Department" and sized as shown in the revised Standard Drawings attached.

Shop drawings for the catch basin frames detailing all dimensions shall be submitted to the Engineer for approval. No frames except those manufactured in conformance with the approved shop plans will be permitted to be used on the project.

c. Construction. Catch basin and manhole frames and covers shall be set in a full bed of mortar on the top of the existing structure wall at such elevation that when the structure cover is set in place the complete unit of frame and cover will be at the required finish or final surface grade. The cover shall so fit the frame that no rattling occurs under traffic loadings. If rattling does occur, the frame and/or cover shall be machined so as to eliminate the rattling.

d. Measurement and Payment. Catch basin and manhole frames and covers will be measured as "Dr Structure Cover, Modified" and paid for per Pound. The Contract Unit Price shall be payment in full for furnishing and installing the required frames, covers and fittings complete.

The additional labor, material, and equipment required to install the frames and covers shall not be paid for separately.

Pay Item	Pay Unit
Dr Structure Cover, Modified	Pound

CITY OF DETROIT

SPECIAL PROVISION
FOR
DR STRUCTURE CLEANING, MODIFIED AND SEWER CLEANOUT, MODIFIED

DET: **Revised: 02-20-14**

Description. The work of Dr Structure Cleaning, Modified consists of cleaning existing catch basin and manhole in the area of the project where directed by the Engineer. The work of sewer cleanout consists of cleaning cross-pipes between catch basins or manholes.

Some of the catch basins, manholes and sewers may be completely filled. The Engineer shall determine actual condition and necessity for cleaning prior to cleanout. Cleaning shall restore 90% of the pipe's carrying capacity.

Construction. When necessary and as directed by the Engineer, the catch basin nearest to the trunk sewer shall be cleaned first and a temporary bulkhead placed in order that the trunk sewer not be infiltrated. Upstream catch basins or manholes and cross-pipes may then be cleaned.

Cleaning shall be by high velocity hydro-cleaning (jetting). Mechanical cleaning shall only be used when authorized by the Engineer. Contractor shall take precautions to protect the sewer lines from damage.

No debris shall be accumulated on site except in totally enclosed containers approved by the Engineer. All material deposits shall be removed from site and disposed of at an approved location.

Measurement and Payment. "Dr Structure Cleaning, Modified" will consist of cleaning catch basins or manholes. "Dr Structure Cleaning, Modified" will be paid for at the contract unit price each, and will include all equipment and labor necessary to clean each catch basin or manhole.

"Sewer Cleanout, Modified" consists of cleaning sewers between catch basins or between catch basins and manholes. "Sewer Cleanout, Modified" will be paid for at the contract unit price per foot which will include payment for furnishing all equipment and labor to clean sewers and hauling away any waste and debris generated. Temporary bulkhead will be included in the cost of "Sewer Cleanout, Modified".

Pay Item	Pay Unit
Dr Structure Cleaning, Modified	Each
Sewer Cleanout, Modified	Foot

CITY OF DETROIT

SPECIAL PROVISION
FOR
DRAINAGE STRUCTURES, MODIFIED

DET:A.A.

Revised: 2/20/14
2/06/12

Descripton. This work consists of constructing all manholes, and catch basins to the size, type, special design, and type of backfill as shown on the plans. Manholes and catch basins shall be constructed to the line and elevation of final grade or as otherwise shown on the plans. The work includes maintenance of sewer service where manholes are built over existing sewers and shall be in accordance with Section 403 of the 2012 Michigan Department of Transportation Standard Specifications for Construction except as otherwise specified.

Materials.

Manhole Frames and Covers - Round:

Round manhole frames and covers shall conform to the Detroit Water and Sewerage Department (DWSD) standard unit, as detailed on the project Drawings. Both the frame and cover shall be castings conforming to the requirements of A.S.T.M. Specification, "Gray Iron Castings," A48, Class 30B.

East Jordan ERGO Assembly or Approved Equal
Product Numbers 00104050L01 and 00104051L01; Weight 235 Lb

Perforated covers shall be used unless otherwise indicated on the project Drawings.

Castings shall be sound, true to form and thickness, clean and neatly finished. The seating face on the cover and the corresponding seat on the frame shall be machine finished so that there will be even bearing at all points with no rocking or tilting.

When a sufficient supply is available, the frames and covers may be purchased from the Sewer Maintenance and Construction Division of the Detroit Water and Sewerage Department.

Catch Basin Frames and Covers

The physical requirements for Catch Basin Frame and Covers will be in accordance with the requirements for manhole frames and covers. The castings for Catch Basin A and B shall be as follows.

East Jordan 5000 Assembly or Approved equal
Product Number 00500063B01, Weight 219 Lb
Product Number 00500063B02; Weight 241 Lb

Shop drawings for the Catch Basin Frames and covers detailing all dimensions shall be submitted to the Engineer for approval. No frames except those manufactured in conformance with the approved shop plans will be permitted to be used on the project.

Frames and covers for all other catch basins shall be in accordance with details shown on the plans.

Manhole Steps:

Manhole steps shall be of aluminum alloy conforming to the requirements for "Aluminum Alloy Extruded Bars, Rods, Shapes and Tubes," A.S.T.M. B221, alloy 6061, and temper T6. The shape and dimensions of each step shall conform to the details shown on the drawings at the end of this section.

A certificate by the manufacturer shall be submitted to the Engineer prior to installation of any step, that the materials meet the requirements of the A.S.T.M. Specification.

Brick:

All brick shall be rectangular in shape with reasonably sharp corners and edges. The standard size shall be 2¼ inches to 2½ inches by 3¾ inches by 8 inches. The dimensions of the brick shall not vary over 1/8 inch in either transverse dimensions and ¼ inch in length. All brick shall be frogged or cored, unless otherwise approved.

Brick shall be free from cracks and flaws and otherwise conform to current ASTM Specifications for "Sewer and Manhole Brick," C32 or "Concrete Building Brick," C55 as is applicable.

Brick shall be sampled and tested in accordance with applicable ASTM Specification for "Sampling and Testing Brick," C67 or "Concrete Masonry Units, Sampling and Testing" C140.

MAXIMUM ABSORPTION (By Weight)		
	Clay or Shale Brick:	
	5 Hour Boiling Test	
	Average of 5 Brick	16%
	Individual Brick	18%
	Concrete Brick:	
	24 Hour Immersion	
	Average of 5 Brick	8%
	Individual Brick	10%

COMPRESSION STRENGTH

All brick shall meet the same compressive strength requirements:

Average of 5 Brick	3,500 p.s.i..
Individual Brick	3,000 p.s.i.

The use of lime, in any form, as a major constituent of brick shall not be permitted.

Concrete Block:

Concrete block, for use in manhole construction, shall conform to the requirements of A.S.T.M. Specification for "Concrete Masonry Units for Construction of Catch Basins and Manhole," C139. The size and shape of the block shall be in accordance with the details on the Drawings.

Precast Concrete Manhole Sections:

Precast reinforced concrete sections for 4 ft. diameter manhole construction shall conform to the requirements of A.S.T.M. Specification, "Precast Reinforced Concrete Manhole Sections," C478 with the following exceptions and additions:

The required manhole steps shall be cast in place with the required spacing and alignment. The top or dome section shall be an eccentric cone with a minimum height of 32 inches. The smaller upper opening shall be designed to accommodate the manhole frame. Where a watertight frame is to be provided, the anchor bolts or stud inserts for the frame shall be cast in place with the required spacing and alignment.

The minimum shell thickness shall be one-twelfth of the internal diameter in inches of the riser or largest cone diameter plus one (1) inch.

No holes for inlet or outlet pipes shall be made in precast units at the site of the work. All necessary openings shall be formed into the precast manhole section as part of the casting operation.

Precast Manhole Bases:

Precast manhole bases for 48-inch diameter manholes shall be reinforced concrete using 3,000 pound concrete. The minimum diameter of the base shall be equivalent to the outside diameter of the manhole. The slab shall be a minimum of 8 inches thick and reinforced two ways with a minimum of 0.14 square inches of steel reinforcing per foot of diameter in each direction placed in the center of the precast circumference of a 48-inch diameter circle shall be provided.

Where the bottom section of the manhole is cast integrally with the base, the base portion shall conform to the requirements stated above.

Mortar:

Mortar for brick or masonry work shall be mixed by volume in the proportions of one part Portland cement to two parts sand. Mortar shall be highly plastic with high water retentivity. A bag of cement 94 pounds shall be considered one cubic foot.

The cement and sand shall first be mixed dry to a uniform color in a batch mixer or a tight mortar box, and then mixed thoroughly with water which shall be added gradually until the required consistency is obtained. Mortar shall be mixed in batches of such sizes as will be used immediately and any mortar which has set sufficiently to require retempering shall not be used.

Catch Basins A, Catch Basins B and Catch Basins B with Trap

Catch Basins A, B and Catch Basins B with Trap shall be constructed in accordance with details shown on the Plans and/or as directed by the Engineer. The materials for Catch Basins shall be in accordance with the materials for "Manholes."

Catch Basins 18 inch x 12 inch, Special "Y"

Catch Basins 18 inch x 12 inch, Special "Y" shall be constructed of concrete sewer pipe.

The pipe joints shall be on cement mortar complying with the applicable requirements for sewers.

Catch Basin "L"

Catch basin "L" shall be constructed of standard concrete sewer pipe.

CONSTRUCTION METHODS:

Manholes

Manholes may be constructed of block or precast reinforced concrete manhole sections, in accordance with the respective details shown on the Drawings, unless a specific type is called for on the Drawings.

Blocks used in manhole construction shall be laid with full mortar joints. All available bearing areas shall be covered with mortar spread in an even layer without splitting or furrowing, and all vertical and interior joints solidly filled with mortar. The courses shall be laid even except where otherwise required. Manholes shall be constructed to be as plumb as is practical.

Concrete block, where used, shall be laid in courses of whole blocks only by using units of the proper size. The joints between individual blocks and between courses shall be uniform. Vertical joints in adjacent courses shall be staggered. The upper portion of the manhole as detailed on the Drawings, shall be "domed" by drawing the block courses equally and evenly to the diameter of the opening at the top required to fit the manhole frame opening. Such doming may be by blocks, provided whole units of such sizes are used to evenly effect the doming. Otherwise, brick, as above specified, shall be used for such sections. All interior mortar joints shall be finished flush. A 1/2 inch thick mortar coat shall be applied to the outer surface of the manhole.

Precast reinforced concrete manhole sections, where used, shall be placed in accordance with the details shown on the Drawings. Such manhole sections shall rest on an integral bottom section and base or concrete block masonry laid up from the manhole base slab. Bottom section or masonry units shall be installed to such a height that when whole manhole sections are used, including the upper dome section, the top of the manhole will be at the proper elevation to accommodate the manhole frame and cover at the required finished grade. When the alternate manhole bottom construction is used, the length of the risers and the dome section shall be adjusted so that the top of the manhole will be at proper elevation to accommodate the manhole frame and cover at the required finished grade.

The joints between the pipe sections in the field shall be synthetic rubber gaskets as specified under "Sewers".

Where precast manhole bases or integral bottom sections are used, they shall be placed on a 3-inch layer of sand. After placing the sand, it shall be leveled to provide a uniform bearing surface for the slab and a level foundation on which to start construction of the manhole.

A manhole built over a brick or pipe sewer shall be thoroughly bonded to the sewer barrel and all connections made without projections or voids. Manholes, when completed, shall be cleared of all scaffolds and thoroughly cleaned of surplus mortar, building materials and all foreign matter.

Where a connection of an existing sewer to a proposed manhole is indicated on the plans, the portion of the sewer removed shall be replaced, beyond the limits of the manhole, with an equivalent size of circular pipe and of the strength approved by the Engineer. This work shall be considered as included in the construction of the manhole and will not be paid for separately.

Manhole Steps:

Manhole steps shall be firmly embedded in the manhole wall or structure in true vertical alignment, spaced as shown on the Drawings, and shall project uniformly, 6½ inches from the face of the wall to the outside edge of the step.

The portion of the step to be embedded in concrete manhole sections or concrete structures shall be wire brushed or otherwise roughened and then covered with one coat of "Bitumastic Super Service Black", as manufactured by Koppers Company, Tnemcol No. 450 heavy, as manufactured by Tnemco Co., or "Bitumastic Super Service Black", as manufactured by Somay Products Inc.. The coating shall be applied and allowed to dry in accordance with the manufacturer's recommendations.

The coating shall extend beyond the embedment at least one inch.

The steps shall not be 'muddied-in' pipe sections, but shall be inserted in the 'green' concrete prior to initial set of the concrete.

Steps to be placed in existing concrete shall be placed in drilled holes and the void space packed with non-shrink grout, using "Embeco", "Groutex", "Ferrolith-G", or approved equal. The mixing and installation of the non-shrink grout shall follow the procedure recommended by the manufacturer of the grout

Manhole Frame and Cover:

The standard round manhole frame shall be set in a full bed of mortar on the top of the manhole wall at such elevation that when the manhole cover is set in place the complete unit of frame and cover will be at the required finish or final surface grade. The cover shall so fit the frame that no rattling occurs under traffic loadings. If rattling does occur, the frame and/or cover shall be machined so as to eliminate the rattling.

Backfilling Around Manholes:

Backfilling adjacent to manhole walls shall be done in such a manner as to simultaneously raise the level of the fill uniformly on all sides of the manhole, compacted as noted below.

No backfilling shall be done around manhole walls within less than 48 hours after the plaster coat has been applied to the outside of the manhole walls.

During the operation of backfilling of an excavation that is sheeted and braced, earth supports shall not be removed in such a manner as to permit earth bank or adjacent streets to give way. Sheeting and bracing may be left in place during backfilling and pulled when backfilling is completed. Sheeting and bracing impossible to remove may be left in place, provided it is cut off 5 feet below ground surface.

Pipes entering a manhole above the bottom of the structure shall be supported with Grade "X" concrete or a masonry pier down to undisturbed earth as indicated on the plans. Grade "X" concrete shall consist of three sacks of cement per cubic yard of concrete and shall be included in the construction of the Manholes.

The backfilling shall be placed and compacted as specified under the City of Detroit Special Provision for Sewers.

Bulkheads:

Brick-bulkheads, as required, shall be built of common brick. The surface of contact of the sewer wall with the bulkhead shall be cleaned and then roughened by bush-hammering or chiseling just prior to the bulkhead construction. Such bulkheads shall be vertical, of the thickness shown on the Drawings with alternate header and stretcher courses laid in mortar in the manner specified for "Manholes." The joints shall be 5/8 inch thick and finished flush.

Removal of bulkheads shall be done in a careful manner that will avoid damage to the sewer. The surface of contact of the sewer wall with the bulkhead shall be cleaned of all brick and mortar and the wall surface left as smooth as possible without mortar patching. The materials from the removed bulkhead shall be promptly removed from the sewer and not left to accumulate.

Unless otherwise specified, the building or removing of bulkheads are included in manhole or sewer construction and will not be paid for separately.

Separate payment will be made only for bulkhead built in 18-inch diameter sewers and larger, or the equivalent size in an egg shape sewer.

Catch Basins A, Catch Basins B and Catch Basins B with Trap

Catch Basins A, Catch Basins B and Catch Basins B with Trap shall be constructed in accordance with details shown on the Plans and/or as directed by the Engineer. The constructions methods for Catch Basins A and B shall be in accordance with the construction methods for "Manholes."

Catch Basins 18 inch x 12inch, Special "Y"

Catch Basins 18 inch x 12inch, Special "Y" shall be constructed in accordance with the Plans and/or as directed by the Engineer.

The pipe joints shall be on cement mortar complying with the applicable requirements for sewers.

Catch Basin "L"

Catch basin "L" shall be used "only" when directed by the Field Engineer or when called for on drawings instead of the standard "Y" basin. Contractor shall construct a standard half trap if directed to do so by the Field Engineer.

Measurement. "Manholes" of the size, type and special design called for will be measured as units.

Catch Basins, as detailed on the Plans, will be measured as units, regardless of the depth of the structure.

Payment. Manhole of the size, type and special design called for will be paid for at the contract unit price each, which shall be payment in full for furnishing the material including required covers and fittings and constructing the structure complete. The contract unit price shall include the cost of maintaining existing sewer service. Excavation, all backfill and disposal of waste excavated material are included in the manhole items without separate payment therefore.

Pavement, curb, and sidewalk removal and replacement will be paid for separately.

Catch Basin A, Catch Basin B, Catch Basin B with Trap, and Catch Basin 18" X 12" Special "Y", Catch Basin "L", Modified will be paid for at the contract unit price each, which shall be payment in full for furnishing the materials including required frames, covers, fittings, traps and constructing the structure complete. The contract unit price shall include the cost of maintaining existing sewer service. Excavation, all backfill and disposal of waste excavated material are included in the catch basin items without separate payment.

Pavement, curb, sidewalk removal and replacement will be paid for separately.

Pay Item	Pay Unit
Catch Basin L, Modified	Each
Catch Basin A, Modified	Each
Catch Basin B, Modified	Each
Catch Basin BT, Modified	Each
Catch Basin 18 inch x 12 inch, Special 'Y', Modified	Each
Manhole, 4 foot, Standard, Modified	Each

CITY OF DETROIT

SPECIAL PROVISIONS
FOR
TOPSOIL SURFACE, FURN, LM, MODIFIED

Revised: 03-132

DESCRIPTION:

"Topsoil Surface, Furn, LM, Modified" shall be in accordance with Section 816 of the 2012 MDOT Standard Specifications for Construction except as herein modified. The depth of topsoil placed shall vary as required to provide a uniform slope after modifying the top of curb elevation. The preparations of the foundation shall be as specified in the 2012 MDOT Standard Specifications for Construction. Lawn sprinkler systems, if encountered, shall be protected by the Contractor at no extra cost.

METHOD OF MEASUREMENT AND BASIS OF PAYMENT:

"Topsoil Surface, Furn, LM, Modified" shall be measured and paid for per cubic yard (loose measure). The contract unit price shall be payment in full for furnishing all materials, labor and equipment necessary to complete the work.

Pay Item	Pay Unit
Topsoil Surface, Furn, LM, Modified	Cubic Yard

SPECIAL PROVISION
FOR

HYDROSEEDING, MODIFIED

DET: UP 12-18-2012

DESCRIPTION: These items of work consist of furnishing and installing mulch and permanent seeding on the prepared topsoil bed using hydroseeding method in accordance with the requirements of Sections 816 and 917 of the 2012 Michigan Department of Transportation (MDOT) Standard Specifications for Construction. The seed mixture, the type of mulch (wood with tackifier), the rates of application, and the guarantee to establish growth shall be as specified herein.

CONSTRUCTION METHODS: Seed shall be sown by using hydroseeding method in accordance with the requirements of Subsection 816.03 of the 2012 Michigan Department of Transportation (MDOT) Standard Specifications for Construction, The rate of application of the seed mixture shall be 250 pounds per acre. The rate of application for the mulch shall be 2500 pounds per acre. The application rate for the chemical fertilizer nutrient shall be as stated in the Standard Specifications.

The Contractor shall be responsible to establish growth of lawn areas where the seed mixture is installed.

MATERIALS: The seed mixture shall be TUF (Turf Urban Freeway per Table 917-1) The seed and chemical fertilizer nutrient shall meet the requirements specified in Subsections 917.10 and 917.12 of the 2012 Michigan Department of Transportation (MDOT) Standard Specifications for Construction Mulching shall be performed using wood mulch with tackifier approved by the Engineer.

MEASUREMENT AND PAYMENT: The completed work of Hydroseeding will be measured in place by area in square yards applied. The contract unit price will be payment in full for furnishing all labor, materials including mulch, seed and chemical fertilizer nutrient and hydro-seeding equipment involved in installing the mulch and seed, including establishing growth.

Pay Item	Pay Unit
Hydroseeding , Modified	Square Yards

City Of Detroit

Special Provision
for
RECESSING for PAVEMENT MARKINGS

A. Description. Recessing grooves shall be cut into the roadway to facilitate the protection of pavement marking material from vehicle wear and cleaning equipment such as snow plows. This work shall be performed for the installation of all transverse line markings except where markings are in-laid into fresh hot asphalt. This work shall conform to Section 811 of the Standard Specifications for Construction and the following provisions specified herein.

B. Construction.

The groove recesses shall be made on concrete and asphalt road surfaces in a single dry pass cut and the equipment used shall be self-vacuuming and leave the cut groove ready for material installation. The blade tool shall be made of stacked diamond cutting heads or engineer approved flat-tooth design hard alloy material such as tungsten-carbide. The bottom of the groove shall have a fine corduroy finish. The remaining roadway surface shall be solid and intact and not cracked or broken with potentially loose pieces subject to breaking off. If a coarse tooth pattern or cracked road surface results, then the tooling must be changed. Either a) the number of blades is to be increased and the spaces on the cutting head are to be decreased or b) the type of blade is to be changed to a superior material or cutting tool design.

Recess Width:	Material width +1 inch, + / - 1/8 inch
Recess Depth:	As recommended by the manufacturer, + / - 5 mils

Permanent Marking Material Application:

The recessing equipment and method used shall comply with the pavement material manufacturer's installation instructions. Recess grooves shall be clean and dry prior to placing any pavement marking material. The entire pavement marking must be placed within the recess and shall be placed in the same day as the recessing work.

C. Measurement and Payment. The completed work as described will be paid for at the contract unit price for the following contract pay items:

Contract Item (Pay Item)	Pay Unit
_ Recessing for Pavt Mrkg, 06 inch	Foot
_ Recessing for Pavt Mrkg, 12 inch	Foot
_ Recessing for Pavt Mrkg, 18 inch	Foot
_ Recessing for Pavt Mrkg, 24 inch	Foot

The item of **Recessing Pavement Markings** includes all equipment and labor necessary to complete the work. Payment for any temporary paint lines (used as a template) is included in the item **Recessing Pavement Markings**.

MICHIGAN
DEPARTMENT OF TRANSPORTATION

SPECIAL PROVISION
FOR
QUALITY CONTROL AND ACCEPTANCE OF PORTLAND CEMENT CONCRETE (FOR LOCAL AGENCY PROJECTS ONLY)

a. Description. The Contractor must administer quality control (QC) and the Engineer will administer quality assurance (QA) procedures that will be used for acceptance of and payment for all Portland cement concrete (PCC) for the project. Except as explicitly modified by this special provision, all materials, test methods, and PCC mixture requirements of the standard specifications and the contract apply.

Provide the Engineer a minimum 24 hours notification prior to each concrete placement.

1. Terminology.

Air Content of Fresh Concrete. The recorded total air content of fresh concrete sampled and tested according to this special provision.

Air Content Test Results. The recorded total air content of fresh concrete that is used to mold corresponding strength test specimens for acceptance.

Alkali-Silica Reactivity (ASR). A chemical reaction which occurs over time within concrete between high alkaline cement paste and reactive forms of silica found in some aggregates. In the presence of moisture, an expansive ASR gel is formed which can exert pressure within the concrete, causing random cracking and premature deterioration of the concrete. See subsection c.5.A.

Concrete Mix Design. The process, by which the concrete mixture performance characteristics are defined, based on selected materials, performance requirements, environmental exposure considerations, placement methods, and other factors that control the plastic and hardened properties of the concrete in efforts to produce an economical and durable product.

Job Mix Formula (JMF). The actual batch quantities (mixture proportions) of each constituent included in the concrete mixture, based on adjustments to the target weights from the mix design, necessary to optimize the concrete mixture properties. Submit mix design and JMF on the MDOT Job Mix Formula (JMF) Concrete Field Communication form (MDOT Form Number 1976); include accompanying documentation.

Production Lot. A discrete cubic yard quantity of concrete containing the same JMF and used for the same application, as described in subsection d.2.

Pay Factor (PF). The factor that is determined according to the formula herein, used to calculate the price adjustment for a discrete quantity of concrete. Pay factor determination

will be in accordance with the requirements in subsection d.3 and can not exceed 1.00. Therefore, there will never be a positive pay adjustment.

Quality Assurance (QA). Activities administered by the Engineer dealing with acceptance of the product, including, but not limited to, materials sampling, testing, construction inspection, and review of Contractor QC documentation. All concrete QA sampling and testing will be performed by the Agency. The Agency administered QA is described in section d of this special provision.

Quality Control (QC). All activities administered by the Contractor to monitor, assess, and adjust production and placement processes to ensure the final product will meet the specified levels of quality, including, but not limited to, training, materials sampling, testing, project oversight and documentation. Contractor administered QC is described in section c of this special provision.

QC Action Limits. A range of values established by the Contractor in the QC plan that, if exceeded, requires that corrective action be taken by the Contractor to restore the continuity and uniformity of the mixture and methods in conformance with specification requirements. The QC action limits must not exceed the QC suspension limits.

QC Plan. The project-specific plan developed by the Contractor describing, in detail, all aspects of production and construction for the project to ensure consistent control of quality to meet specification requirements.

QC Plan Administrator. An employee of, or consultant engaged by the Contractor, responsible for developing and overseeing all aspects of QC for the project. This includes, but is not limited to preparing the QC plan, managing the Contractor QC personnel, communicating routinely with the production personnel to ensure quality, initiating corrective action and suspending operations when the process is found to be producing non-conforming materials, and preparing and submitting all necessary QC documentation to the Engineer within the specified time period. The QC Plan Administrator must be a certified concrete technician (Michigan Level II), or have direct authority over a certified concrete technician (Michigan Level II) for the project.

QC Suspension Limits. A range of values defined in Table 1 that, if exceeded on a single QC test, requires that the Contractor suspend operations and determine, correct, and document the deficiencies before resuming production. The Engineer must approve all changes prior to resuming production. The QC suspension limit must not exceed specification requirement thresholds.

Sample. A representative quantity of concrete taken during production which is used to measure the quality characteristics for a respective production lot of concrete.

Sampling Rate. The number of times the fresh concrete is sampled by the Engineer for acceptance. The sampling rate will be determined by the Engineer as described in subsection d.2.B.

Small Incidental Quantity. A single day's placement of less than 20 cubic yards of concrete used for non-structural or non-pavement related applications, including, but not limited to: curb and gutter, sidewalks and sidewalk ramps (excluding driveways and driveway ramps), installing sign or fence posts, guard rail or cable rail foundations

(excluding end anchorage foundations), or other contract items where the small quantity of concrete is not paid for separately, as directed by the Engineer. Price adjustment will not be applied to small incidental quantities provided all other provisions are met for the respective contract item. Requirements for small incidental quantity consideration are described in subsections c.5.G and d.2.B. The corresponding weekly QA 28-day compressive strength test results described in subsection d.2.B must meet specification limits defined in Table 2. ASR requirements specified in subsection c.5.A are not required for small incidental quantities.

Specification Limits. The threshold values defined in Table 2 assigned to each quality characteristic used to evaluate the quality of the material.

Strength Sample Test Result. A strength sample test result consists of the 28-day compressive strength of the 6-inch by 12-inch or 4-inch by 8-inch cylindrical strength test specimens. A strength sample test result is the average of the two companion strength test specimens taken from the same sample of concrete.

Strength Test Specimen. A strength test specimen is defined as each individual 6-inch by 12-inch strength test cylinder or 4-inch by 8-inch strength test cylinder molded and cured according to AASHTO T 23/ASTM C 31 and tested according to AASHTO T 22/ASTM C 39. All respective QC or QA strength test specimens must be the same nominal size.

Note: Strength test specimen cylinder size of 4-inch by 8-inch is permitted only if the nominal maximum coarse aggregate particle size, as specified for the coarse aggregate in the concrete mixture, is 1-inch, or less.

b. Materials. Mixture requirements must be in accordance with the contract.

c. Contractor Administered Quality Control (QC).

1. Contractor Quality Control Plan (QC Plan). Prepare, implement, and maintain a QC plan specific to the project for concrete that will provide quality oversight for production, testing, and control of construction processes. The QC plan must identify all procedures used to control production and placement including when to initiate corrective action necessary to maintain the quality and uniformity of the work.

Develop concrete mix designs and JMFs, as specified, and conduct QC sampling, testing, and inspection during all phases of the concrete work at the minimum frequency, or at an increased frequency sufficient to ensure that the work conforms to specification requirements.

Project-specific items and quality characteristics required in the QC plan include, but are not limited to the following:

A. Organization chart.

B. QC Plan Administrator and contact information.

C. The name(s) and credentials of the QC staff.

D. Methods for interaction between production and QC personnel to engage timely corrective action, including suspension of work.

E. Coordination of activities.

F. Documentation, procedures, and submittals.

G. Project and plant specifics.

H. Concrete production facilities inspections and certifications.

I. Current testing equipment calibration documentation including calibration factor.

J. Testing and initial field curing facilities for QC and QA strength test specimens (AASHTO T 23/ASTM C 31).

K. Stockpile management plan.

L. Corrective action plan.

M. Mixing time and transportation, including time from batching to completion of delivery and batch placement rate (batches per hour), along with the manufacturer's documentation relative to the batching equipment's capabilities in terms of maximum mixing capacity and minimum mixing time.

N. Placement and consolidation methods including monitoring of vibration, depth checks, and verification of pavement dowel bar alignment.

O. Process for monitoring stability of air content of fresh concrete during concrete production and placement.

P. Hot and cold weather protection considerations and methods.

Q. Control charts with action and suspension limits.

R. Verification for non-deleterious alkali-silica reactivity (see subsection c.5.A).

S. Mix design and JMFs.

T. Proposed location for use of each JMF on the project.

U. The frequency of sampling and testing.

V. Handling, protection, initial curing, and transporting of strength test specimens (AASHTO T 23/ASTM C 31).

W. Methods to monitor construction equipment loading and open-to-traffic strengths.

X. Finishing and curing procedure.

Y. Ride quality control.

Submit the QC plan, for the appropriate items of work, to the Engineer for review a minimum of 10 working days before the start of related work. The Engineer will notify the Contractor of any objections relative to the content of the QC plan within 5 working days of receipt of the QC plan. Do not begin concrete placement before acceptance of the QC plan by the Engineer.

2. QC Records. Maintain complete records of all QC tests and inspections. Document what action was taken to correct deficiencies. Include sufficient information to allow the test results to be correlated with the items of work represented.

Furnish one copy of all QC records and test reports to the Engineer within 24 hours after the date covered by the record in a format acceptable to the Engineer. The Engineer will withhold acceptance of the concrete for failure to provide properly documented and timely QC records and reports.

If the Engineer is performing QA sampling and testing at the same time the Contractor is performing QC sampling and testing, all associated QC records must include the appropriate identification number that correlates with the Engineer's QA identification number.

3. Personnel Requirements. The QC Plan Administrator must have full authority and responsibility to take all actions necessary for the successful implementation of the QC plan, including but not limited to, the following:

A. Monitoring and utilizing QC tests, control charts, and other QC practices to ensure that delivered materials and proportioning meets specification requirements.

B. Monitoring materials shipped to the project, prior to their use, to ensure their continued compatibility toward producing consistent quality.

C. Periodically inspecting all equipment utilized in transporting, proportioning, mixing, placing, consolidating, finishing, and curing to ensure proper operation.

D. Monitoring materials stockpile management, concrete batching, mixing, transporting, placement, consolidation, finishing, and curing to ensure conformance with specification requirements.

E. Maintaining and submitting all QC records and reports.

F. Directing the necessary corrective action to ensure continual conformance within the QC action limits.

G. Suspending production for the project when suspension limits are exceeded.

H. Conducting or monitoring adjustments to the JMF.

Individuals performing QC tests must demonstrate that they are proficient and capable of sampling and testing concrete or aggregate, where applicable, in accordance with the associated test procedures and Agency requirements prior to commencement of related

work. Any adjustments to the JMF must be made by a certified concrete technician (Michigan Level II).

4. QC Laboratory Requirements. Laboratories, including field laboratories and all associated testing equipment that prepare concrete mixes or perform QC testing, must demonstrate to the Engineer that they are equipped, staffed, calibrated, and managed so as to be capable of batching, and testing Portland cement concrete in accordance with the applicable test procedures. Mix designs and their accompanying JMFs must include a statement, signed by a certified concrete technician (Michigan Level II), that all applicable standard test methods have been followed in verifying the mix design and JMF.

5. Mix Design and Documentation. Design concrete mixtures meeting the requirements specified in Tables 601-2 and 701-1 of the Standard Specifications for Construction. Provide the grade of concrete for the section number reference application specified in Tables 601-2 and 701-1, or as specified in the contract. Request variance in writing when proposing a mix design and JMF that exhibits temperature, slump or air content other than those specified. Include the proposed mix design, JMF, and associated trial batch verification test data. Do not use a grade of concrete with a minimum specified 28-day compressive strength greater than what is designated for the application. The maximum water/cementitious ratio must not exceed 0.45.

The maximum slump for Grades P1 and P2 concrete is 3 inches or as documented on the approved JMF. All other grades of concrete will be according to Tables 701-1 A and B of the Standard Specifications for Construction

The specified air content of fresh concrete is 5.5 - 8.0 percent. Air content of fresh concrete less than 5.5 percent for concrete that lies in the finished work at least 3 feet below the surface of the ground or entirely under water will not be cause for rejection.

Use aggregates from only geologically natural sources.

Secure prior approval from the Engineer to use concrete intended for early opening to traffic to facilitate driveway gaps or other features necessary for required local access.

Unless specified otherwise, do not exceed 40 percent substitution by volume of the total cementitious materials with slag cement or fly ash. Use the combined weight of all cementitious materials to determine compliance with the maximum water-cementitious ratio and cementitious material content requirements specified above. Include provisions for cold and hot weather protection in the QC plan.

Use admixture dosage as indicated in the Qualified Products List to reduce mixing water. For night casting, where applicable, a water-reducing admixture may be used in lieu of a water-reducing and retarding admixture, provided the concrete can be placed and finished in the sequence specified on the plans prior to initial set, is not subjected to residual vibration, or is not within the areas influenced by dead load deflections as a result of adjacent concrete placement operations.

A. Alkali-Silica Reactivity. Provide documentation to the Engineer that the concrete mixture does not present the potential for excessive expansion caused by alkali-silica reactivity (ASR). Provide a Test Data Certification with the latest test results (valid for 2 years) conforming to the specified criterion for one of the following standard test

methods ASR requirements specified in subsection c.5.A are not required for small incidental quantities.

(1) Method 1. ASTM C 1260. Mortar Bar Test. If the expansion of the mortar bars is less than 0.10 percent at 14 days of immersion, the fine aggregate is considered non-deleterious to ASR reactivity and may be used in the concrete without the need for ASR mitigation.

(2) Method 2. ASTM C 1293. Concrete Prism Test.

- If the expansion of concrete prisms is not greater than 0.040 percent after 1 year, the fine aggregate is considered non-deleterious to ASR reactivity and may be used in the concrete without the need for ASR mitigation.

- If the expansion of concrete prisms is greater than 0.040, but not exceeding 0.120 percent after 1 year, the fine aggregate is considered moderately deleterious to ASR reactivity and mitigation is required, as follows. A Low-Alkali cement with equivalent alkalies (Na_2O + 0.658 × percent K_2O) not exceeding 0.60 percent may be used in the concrete mixture to mitigate the potential for ASR reactivity provided the total alkali content for the cementitious materials combination does not exceed 3.0 pounds per cubic yard (Na_2O equivalent).

(3) Method 3. ASTM C 1567. Mortar Bar Test. If no previous test data are available for the fine aggregate that shows it is resistant to ASR using either Method 1 or 2, above, replace 25 to 40 percent of the Portland cement in the concrete mixture with Class F fly ash or Slag Cement (Grade 100 minimum). A blended cement meeting the requirements of ASTM C 595 containing Portland cement and slag cement or Class F fly ash may also be used.

Demonstrate the ability of the fly ash or slag cement to control the deleterious expansion caused by ASR by molding and testing mortar bars according to the standard test method described in ASTM C 1567 using the mix proportions for both the aggregates and the cementitious materials proposed for the project. Make at least three test specimens for each cementitious materials-aggregate combination. If the average of three mortar bars for a given cementitious materials-aggregate combination produces an expansion less than 0.10 percent at 14 days of immersion, the JMF associated with that combination will be considered non-deleterious to ASR reactivity. If the average expansion is 0.10 percent or greater, the JMF associated with that combination will be considered not sufficient to control the deleterious expansion caused by ASR and the JMF will be rejected.

If the expansion exceeds the respective threshold limits for the ASTM used, then the Engineer will not approve the use of that concrete mixture.

B. Contractor Provided Mixes. Provide mix design and accompanying JMFs using the methods of verification included in this special provision. Include sufficient information on constituent materials and admixtures along with trial batch verified physical properties of the fresh concrete, mix proportions per cubic yard for all constituents and compressive strength test results necessary to allow the Engineer to fully evaluate the expected performance of the concrete mixture.

(1) Mix Documentation. Prepare mix designs for each grade of concrete required on the project. Submit JMF for each mix design, including all required documentation, to the Engineer for review 10 working days before the anticipated date of placement. The Engineer will notify the Contractor of any objections within 5 working days of receipt of the mix documentation. Number or otherwise identify each JMF and reference all accompanying documentation to this number. Reference each JMF to the appropriate method of verification. Mix design and JMF submittals that do not include all required documentation will be considered incomplete and the Engineer will return them without review.

Provide all supporting mix documentation, including test reports and mix proportion adjustment calculations. All mix designs and accompanying JMFs must be traceable to a laboratory meeting the requirements of this special provision. Include the necessary documentation described in subsection c.5.

Submit mix design and JMF on the MDOT Job Mix Formula (JMF) Concrete Field Communication form (MDOT Form Number 1976); include accompanying documentation. List the source of materials, bulk density (unit weight) of coarse aggregate (rodding procedure or shoveling procedure), absorption of aggregates, relative density (specific gravity) of aggregates, aggregate correction factors, batch weights, and project specific or historical laboratory test data. Include the recorded air content of fresh concrete using the same admixture and cementitious material sources to be used in the production of the concrete for the project. The 28-day compressive strength and air content of fresh concrete for the concrete which is reported as part of the mix documentation submittal must meet the specification limits described in Table 2.

(2) Job Mix Formula (JMF). Select proportions for concrete mixtures according to ACI Standard 211.1. The volume of coarse aggregate per unit volume of concrete must be 65 to 75 percent, inclusive.

Four methods of verification of proposed JMF are acceptable.

(a) Method 1. Trial Batches. Base trial batches on the same materials and proportions proposed for use on the project. Prepare at least one trial batch for each mix design in sufficient time before starting concrete placement to allow for review according to subsection c.5.B.(1). Provide the results of temperature, slump, density (unit weight), air content of fresh concrete, 28-day compressive strength, and age of concrete at the time of strength testing, for a minimum of three independent samples. For JMF trial batch verification purposes only, 7-day compressive strength test results which report at least 70 percent of the specified 28-day minimum design strength will be sufficient documentation in lieu of 28-day compressive strengths. The average of at least two strength test specimens represents one compressive strength sample test result for each independent sample. A JMF will be considered approved for use only if all of the physical properties of the concrete (as described above) are within specification limits. Provide the necessary ASR documentation as described in subsection c.5.A.

(b) Method 2. Same Mix. Verification based on experience with the same mix design, JMF, and the same materials. Provide the results of temperature,

slump, density (unit weight) air content of fresh concrete, 28-day compressive strength, and age of concrete at the time of strength testing, for a minimum of three independent samples. The average of at least two strength test specimens represents one compressive strength sample test result for each independent sample. Do not substitute material types or sources, including admixtures or cementitious materials, nor change mix proportions in the JMF. A JMF will be considered approved for use only if all of the physical properties of the concrete (as described above) are within specification limits. Provide the necessary ASR documentation as described in subsection c.5.A.

(c) Method 3. Similar Mix. Verification based on experience with a mix design and JMF similar to the proposed mix design that used similar coarse aggregate materials. Substitution of coarse aggregate source is permitted only if the new source is of the same geologic type and meets minimum physical properties as the original aggregate and conforms to the specification requirements for the respective application. Verify, prior to batching, that the proposed changes to the JMF will not affect the properties of the fresh concrete (slump, temperature, air content, density (unit weight), workability), nor result in excessive mortar bar expansion as a result of deleterious reactivity between the aggregates and cementitious materials as described in subsection c.5.A.

Provide the supporting laboratory test documentation as for Method 1. Include all material properties for the original and substituted aggregates. Submit calculations showing how the mix proportions in the JMF were adjusted, based on the documented differences in relative density (specific gravity), bulk density (unit weight) and absorption of the substituted aggregate sources, to produce a theoretical yield of 100 percent.

(d) Method 4. Annual Verification. At the Engineer's option, verification may be accepted annually for a concrete plant rather than on a project basis provided the sources and proportions of the constituent materials, including cementitious materials and source and types admixtures, do not change. If the project is the continuation of work in progress during the previous construction season and written certification is submitted to the Engineer that materials from the same source and with the same mixture properties are to be used, the Engineer may waive the requirement for annual renewal verification of the JMF for the project. Provide the necessary ASR documentation as described in subsection c.5.A.

C. Agency Provided Mixes. Unless otherwise specified in the contract, the Engineer will provide the concrete JMF for the following types of concrete regardless of the total quantity for the project.

- Structural concrete patching mixtures, mortar and grout.
- Prestressed concrete.
- Bridge deck overlay concrete mixtures.
- Project-specific concrete mixtures and grades not defined in Tables 601-2 and 701-1 of the Standard Specifications for Construction.

D. Changes in Materials and Proportions. Any changing from one approved JMF to another for the same grade of concrete must have prior approval by the Engineer. Record all changes to JMF in the QC records along with the rationale for the change. Verify, prior to batching, that the proposed changes to the JMF will not affect the properties of the fresh concrete (slump, temperature, air content, density (unit weight), workability), nor result in excessive mortar bar expansion as a result of deleterious reactivity between the aggregates and cementitious materials as described in subsection c.5.A.

E. QC Sampling and Testing. Conduct startup sampling and testing for temperature, slump, density (unit weight), and air content on the first load. Do not place concrete until testing verifies that the fresh concrete properties have not exceeded the QC action and suspension limit thresholds specified in Table 1. Continue testing subsequent loads as described in the QC plan, for each grade of concrete delivered to the work site each day. The QC sampling and testing must be random and independent from the Engineer's QA sampling and testing.

Ensure that the curing facilities are on site and are equipped to provide the proper environment for initial curing of the QC and QA concrete strength test specimens.

Perform QC sampling and testing of the fresh concrete for air content loss at least once during each week of concrete production, or whenever QC tests have shown that QC action limits have been exceeded, whichever is more frequent. Sample and test a representative haul unit of concrete immediately after its discharge but before the paver or pump hopper, where applicable. Sample and test the concrete representing the same haul unit, again, after the paver or after discharge from the pump and after vibration, where applicable. If the difference in measured air content between the two test locations for the same concrete is greater than two percent air by volume of concrete, suspend operations and administer corrective action. Resume concrete placement only after taking the necessary corrective action to reduce the loss in air content of fresh concrete between the two test locations, as approved by the Engineer. Document the corrective action to be taken in the QC records and make the necessary changes to the QC plan, where applicable.

Concrete exceeding the maximum specification limits for slump or temperature must be rejected regardless of the total mixing time or number of mixing revolutions at the time of arrival to the project.

The Engineer may require the Contractor to administer additional QC sampling and testing if the Engineer determines the Contractor's current QC sampling and testing methodology is shown to be insufficient to ensure continual control of the quality of the concrete.

Take the appropriate corrective action, as described in the QC plan, when QC testing shows the QC action limits for any quality characteristic are exceeded. Suspend production if any of the QC suspension limits are exceeded or if the corrective action is not sufficient to restore the quality to acceptable levels.

Resume production only after making all necessary adjustments to bring the mixture into conformance with all applicable specifications and receiving approval to resume work from the Engineer. Document these adjustments in the QC records.

Table 1: Action and Suspension Limits

Quality Characteristic	Action Limits	Suspension Limits
Air Content (percent)	As Defined in the Contractor QC Plan	< 5.5 or > 8.0
Air Content Loss (percent)		Greater than 2.0
Conc. Temp. (Deg. F)		< 45 or > 90 at time of placement
Slump (max.) (inch)		See subsection c.5
Density (unit weight)		N/A

F. Work Progress Test Specimens. Determine the strength of concrete for opening to construction traffic or regular traffic, for removing shoring and forms, or for other similar purposes in accordance with subsections 104.11, 601.03.H and 701.03.D of the Standard Specifications for Construction, and as approved by the Engineer. Cure work progress test specimens in the same manner as the in-situ concrete. Allow the Engineer to witness testing of work progress cylinder or beam specimens and non-destructive testing, including calibration tests.

For pavement repairs described in section 603 of the Standard Specifications for Construction, the maturity method may be used to determine the in-place, opening-to-traffic flexural strength, provided the necessary preliminary flexural strength versus opening-to-traffic time correlations, using the same materials and JMF, are established and approved by the Engineer before placing the concrete.

G. Reduced QC for Small Incidental Quantities. Reduced levels of on-site QC testing for concrete may be considered for small incidental quantities defined in subsection a.1 provided provisions for administering reduced QC testing and oversight are included in the approved QC plan and the following criteria are met.

(1) The small incidental quantity of concrete will be limited to a single day's concrete placement.

(2) The small incidental quantity is not an integral part of a structural load bearing element.

(3) The Engineer received written certification from the Contractor that the concrete supplier has a current QC plan in place and available for review upon request by the Engineer.

(4) The concrete supplier employs a certified concrete technician (Michigan Level II) available at the plant or on call during concrete placement to validate and authorize modifications to the concrete JMF, as necessary.

(5) Prior to the first concreting operation, concrete representing the JMF for the small incidental quantity has been sampled and tested by a certified concrete technician (Michigan Level I or II) to verify that, historically, the JMF produced a concrete mixture meeting the minimum requirements for density (unit weight), slump, air content, and strength. Annual verification may be acceptable provided there are no changes to the material types or sources, including cementitious materials and admixtures.

(6) The Engineer verified that the temperature, slump, and air content conform to specification requirements at the start of the day's concreting operation associated with the small incidental quantity.

(7) The Engineer is notified and provided sufficient opportunity to witness concrete placement.

d. Agency Administered Quality Assurance (Acceptance).

1. Agency Quality Assurance Plan (QA plan). The Engineer will be responsible for administering the quality-based acceptance and will institute any actions necessary toward its successful implementation.

Acceptance of concrete for full-depth pavement repairs will be according to section 603 of the Standard Specifications for Construction.

The Engineer will develop and follow a QA plan. The Engineer will provide the QA plan to the QC Plan Administrator a minimum of 7 calendar days prior to the pre-production meeting. The QA plan will be reviewed at the pre-production meeting and any proposed changes will be documented.

The nominal QA strength test specimen size, defined in subsection a.1 will be noted in the QA plan.

A. Personnel Requirements. The personnel responsible for field inspection and for obtaining QA samples will possess the required qualifications to collect QA samples. Sampling will be performed by qualified personnel possessing the current applicable certification through the Michigan Concrete Association (Michigan Level I or II) or through the Michigan Concrete Paving Association (Level I or II) certified concrete technicians, or where applicable, (MCAT) certified aggregate technician.

B. QA Testing Correlation. The testing equipment and associated testing personnel for both the Engineer's QA and Contractor's QC will conduct side by side testing of the same concrete representing the first production placement for the project to verify correlation of both the Engineer's and the Contractor's test results for slump, temperature, and air content of fresh concrete. The temperature measuring devices used for QC and QA must correlate relative to each other within 2 degrees F. The Engineer will request an Independent Assurance Test in the event the air content results of two tests conducted between the Engineer's and the Contractor's testers differ by more than 1.0 percent air by volume of concrete.

C. Laboratory Facilities. The testing laboratory with responsibility for acceptance testing on this project is the Agency testing laboratory, or a qualified facility under the authority of the Engineer.

2. QA Sampling and Testing. The Engineer will conduct QA sampling and testing, monitor the Contractor's adherence to the QC plan, and inspect field placed materials. Initial approval is required prior to concrete placement for, temperature, slump and air content, and is based on the Engineer's observance of QC startup sampling and testing described in subsection c.5.E.

A. Production Lot Size and Make Up. A production lot will be defined as a single day of concrete, or as determined by the Engineer. A production lot will not include more than one grade of concrete, concrete of the same grade having different specified slump or air content, or concrete of the same grade having different material sources, mix designs or JMFs.

B. Sampling. Representative QA sampling and testing will be determined by the Engineer during concrete placement. The sampling rate will be one sample per 50 cubic yards, approximately, plus or minus, based on the anticipated total quantity of concrete to be placed and site conditions, with a minimum of one sampling for each day of production.

At the option of the Engineer, small incidental quantities as defined in subsection a.1 may be accepted (visually inspected and noted on the Inspector's Daily Report) without daily 28-day compressive strength QA test specimens provided there is a current acceptable strength test history of the JMF for the project prior to placement of the small incidental quantity. One set of compressive strength QA test specimens will then be molded for each small incidental quantity JMF at least once per week during production, thereafter, as directed by the Engineer (note the test results or identification number for the corresponding weekly QA compressive strength test result on the Inspector's Daily Report for each small incidental quantity). Quality control testing and daily QA testing for temperature, slump, and air content are still required as described in subsection c.5.G.

Samples will be taken from the concrete at the location as close to its final placement into the forms or on the grade as practical.

Samples for acceptance will not be taken at the concrete production facility (batch plant), nor prior to discharge from a concrete pump (excluding tremie seal placement applications). Mix adjustments (beyond normal QC) to the haul unit selected for QA sampling and testing will not be permitted prior to QA sampling and testing. QA sampling will be random and without prior notification.

C. Testing. The location(s) within the project limits for QA testing of the fresh concrete and placement of curing facilities for initial curing of the 28-day compressive strength QA test cylinders will be determined by the Engineer in conformance with the following criteria:

(1) The elapsed time between obtaining the first and the final portion of the composite sample must not exceed 15 minutes.

(2) Testing for slump, temperature, and air content of fresh concrete must begin within 5 minutes after obtaining the final portion of the composite sample.

(3) Molding of the 28-day compressive strength QA test cylinders must begin within 15 minutes after obtaining the final portion of the composite sample.

(4) The concrete sample must be protected from the sun, wind, and other sources of rapid evaporation, and from contamination.

The Contractor will provide curing facilities equipped to ensure the proper environment for the Engineer's QA concrete strength test specimens during initial cure. Each initial

cure facility must provide ventilation or insulation, where applicable, to ensure the ambient temperature surrounding the specimens is maintained according to AASHTO T 23. Failure by the Contractor to maintain the proper curing environment during initial cure will not be basis for rejection of QA samples. Each initial curing facility must be capable of being locked, using an Agency provided padlock. The Contractor will ensure that all initial curing facilities are accounted for at all time, and protected against, theft and damage. The Contractor will locate and secure each initial cure facility throughout the project limits in such a manner so as to minimize excessive transport of the test specimens prior to initial cure, as follows:

- Immediately after finishing molded specimens, the Engineer will move the QA concrete strength test specimens to the closest initial cure facility provided by the Contractor.

- Immediately after all QA concrete strength test specimens are placed into the cure facility and the proper initial curing conditions have been established, the Engineer will secure the facility using the Agency provided padlock. Access to the QA concrete strength test specimens, thereafter, must be coordinated with the Engineer and will only be permitted in the presence of the Engineer.

- The Engineer will transport the QA concrete strength test specimens within 48 hours after molding, but not prior to 8 hours after final set of the concrete, from the initial curing facility to the Agency designated testing laboratory for final curing and strength testing. The specimens will be protected with a suitable cushioning material to prevent damage from jarring during transport. The total transportation time must not exceed 4 hours prior to commencement of final curing.

D. QA Stop Production Criteria. The Engineer will issue a Notice of Non-Compliance with Contract Requirements (Form 1165) and concrete production must stop when one or more of the following are observed.

(1) The QA testing shows that one or more of the suspension limits for quality characteristics defined in Table 1 are in non-compliance.

(2) The QC plan is not being followed.

(3) Segregation, excessive slumping of unsupported slipformed edges, or other notable changes in the fresh concrete properties is observed that may prevent proper placement, consolidation and finishing, or compromise the performance or long-term durability of the finished product.

(4) The required curing system is not being applied in a timely manner, as specified by the contract.

(5) If the difference in measured air content between the two testing locations for the same concrete is greater than two percent air by volume of concrete, as follows:

(a) immediately after discharge but before the paver or pump hopper (where applicable), and

(b) after the paver or discharge from the pump (where applicable).

The Engineer will issue a Notice to Resume Work (Form 1165) only after all necessary adjustments are made to restore conformance with all applicable specifications, and the appropriate documentation is made in the QC records.

E. QA Records. The Engineer will maintain a complete record of all QA tests and inspections. The records will contain, as a minimum, signed originals of all QA test results and raw data, and resulting calculations. The QA test results will not be provided to the Contractor until the corresponding QC test results are received by the Engineer.

3. Pay Factor Determination and Price Adjustment. The Engineer's QA test results will be used to determine the pay factor (PF) and price adjustment (ADJ). The Contractor's QC test results will not be used for pay factor and price adjustment analysis. The Engineer will complete pay factor and price adjustment analysis within 7 days after completion of all 28-day compressive strength testing for the representative production lot.

Table 2: Specification Limits

Quality Characteristic	Specification Limits
Air Content (percent)	5.5 – 8.0
Conc. Temp. (Deg. F)	45 - 90 at time of placement
Slump (max.) (inch)	See subsection c.5
28-day Compressive Strength	LSL, subsection c.5
Rejection Limit - Lower 28-day Compressive Strength	0.75 x (LSL)

The specification limits for the fresh concrete properties are defined in subsection c.5. Concrete not conforming to the requirements specified in subsection c.5 may be rejectable and subject to further evaluation, as directed by the Engineer.

Use the following formula to calculate the PF and associated price ADJ for each concrete item.

$$PF = \frac{\text{Tested Strength}}{\text{LSL}}$$

$$ADJ = (PF-1)\ (\text{Price})$$

Tested Strength = QA 28-day compressive strength sample test result
LSL = Lower specification limit (Minimum Design Strength, see subsection c.5)
PF = Pay Factor (carried to two decimal places, not to exceed 1.00)
ADJ = Price adjustment to be applied to the quantity represented by the QA test
Price = Contract unit price bid for the pay item

4. Re-evaluation of Rejectable Concrete. If the tested strength does not achieve the lower rejection limit specified in Table 2, the associated concrete will be rejected and the Engineer will require additional evaluation to decide what further action may be warranted. If the Engineer determines that non-destructive testing (NDT) or coring is necessary, this work will be done by the Contractor in the presence of the Engineer within 45 days from

concrete placement. All costs associated with this work will be borne by the Contractor. The Engineer will take custody of all cores intended for re-evaluation immediately after coring. If NDT is used to estimate the in-situ strength, a calibrated relationship between the concrete mixture and the NDT apparatus must have been established prior to NDT testing according to its respective standard test method. Test results from re-evaluation of rejectable concrete using NDT or coring will not be used for pay factor (PF) and price adjustment (ADJ) purposes. If the results from re-evaluation confirm that the lower rejection limit for 28-day compressive strength has been achieved, the represented quantity of concrete will remain in place and a pay factor (PF) of 0.75 will be applied for price adjustment (ADJ) determination. However, if the results from re-evaluation confirm that the lower rejection limit for 28-day compressive strength has not been achieved, as described above, the Engineer will elect to do one of the following.

A. Require removal and replacement of the entire represented quantity of concrete with new initial tests and pay factor and price adjustment analysis procedure conducted.

B. Allow the represented quantity of concrete to remain in place and apply an adjustment of minus 50.00 percent to all concrete items in the lot.

C. Allow the Contractor to submit a plan for corrective action for the Engineer's approval, to address the disposition of the rejectable concrete. If the Engineer does not approve the plan for corrective action, subsection d.4.A or d.4.B will be applied.

e. Measurement and Payment. If a price adjustment is made for reasons included in this special provision, that adjustment will be made using the original unit price bid for the specific item. If a contract unit price requires adjustment for other reasons not described in this special provision, the adjustments will be made using the original unit price and the adjustments will be cumulative.

Separate payment will not be made for providing, implementing, and maintaining an effective QC program. All costs associated with this work will be included in the applicable unit prices for the concrete items. Failure by the Contractor to maintain the proper curing environment during initial cure will not be basis for claim against the Agency.

All costs associated with providing, locating, relocating, maintaining, and securing the adequate number of portable curing facilities for the project, necessary to provide sufficient initial curing for the Contractor's QC and Engineer's QA strength test specimens will be included in the applicable unit prices for the concrete items. No additional payment will be permitted. The Contractor is responsible for damage, theft, subsequent replacement, and removal after completion of the work for each curing facility used on the project.

City of Detroit
SPECIAL PROVISION
FOR
HAND SPRAYED WATERBORNE PAVEMENT MARKINGS

TED: JF 03-19-13

I. Description. Prepare pavement surfaces and apply by hand wand retro-reflectorized white or selectively colored waterborne pavement markings including legends, symbols, crosswalks, stop bars and miscellaneous lines. Complete this work according to this special provision, the project plans, the 2012 Michigan Department of Transportation Standard Specifications for Construction, and as directed by the Engineer.

II. Materials. Select waterborne pavement marking material from the Qualified Products List (QPL). Use standard glass beads as called for in Section 920 of the Standard Specifications for Construction **except as noted in this provision:**

A. General:
1. All material used in the formulation of the pavement marking paint shall meet the requirements herein specified. Any materials not specifically covered shall meet the approval of the engineer.

B. Composition Requirements:
1. The pavement marking paint shall be a ready-mixed, one component, water-borne traffic quality paint, of the correct color, to be applied to either asphaltic or Portland cement concrete pavement. The composition of the paint shall be determined by the manufacturer. It will be the manufacturer's responsibility to produce a pigmented water-borne paint containing all the necessary co-solvents, dispersant, wetting agents, preservatives and all other additives, so that the paint shall retain its viscosity, stability and all of the properties as specified herein. The manufacturer shall certify that the product does not contain mercury, hexavalent chromium, toluene, chlorinated solvents, hydrolysable chlorine derivatives, ethylene-based glycol ethers and their acetates, nor any carcinogen, as defined in 29 CFR 1910.1200. The certification shall indicate a lead content not exceeding 0.06 percent by weight of the dry film, and the test for chromium content shall be negative.

2. **No glass beads will be allowed in the pavement marking paint. Glass beads will be applied after the paint has been applied.**

C. Manufacturing Formulations: The manufacturer shall formulate the pavement marking paint in a consistent manner and notify the engineer of any change of formulation. The formulation of the paint shall be determined by the manufacturer. It will be the manufacturer's responsibility to formulate paint which will meet the quantitative and qualitative requirements of this specification. Any change in the formulation of the paint must be approved by the CITY and Michigan Department of Transportation.

Rev: 02/14/08 PAINTED PAVEMENT MARKINGS 02520 - 2 D. Quantitative Requirements of Mixed Paints:	**White**	**Yellow**
Pigment: Percent by weight, ASTM D 3723, Allowable variation from qualifying sample	± 2.0	± 2.0
Non-Volatile Content: Percent by weight, ASTM D 2369, allowable variation from qualifying sample	± 2.0	± 2.0
Viscosity: Krebs Units at 77 ± 1° F, ASTM D 562	70 – 85	70 – 85
Weight per Gallon: Pounds per gallon 77 ± 1° F, ASTM D 1475P, allowable variation from qualifying sample	± 0.3	± 0.3
Vehicle Composition: Vehicle Infrared Spectra, ASTM D 2621, allowable variation from qualifying sample	None	None
pH: ASTM E 70, Allowable variation from qualifying sample	± 1.0	± 1.0
Fineness of Dispersion: HEGMAN, minimum, ASTM D 1210	3.0	3.0
Volatile Organic Compounds: Pounds per gallon of paint, maximum, ASTM D 3960 according to 7.1.2.	2.1	2.1
Flash Point: Degrees F., minimum, ASTM d 93, Method A	100	100
Dry Time to No Pick Up: With no beads: minutes, maximum, ASTM D 711	10	10
Dry Through Time: Minutes, ASTM D 1640 except no thumb pressure is used when thumb is rotated 90° on paint film	20	20
Flexibility: TT-P-1952D	Pass	Pass

The material must be shipped to the job site in sturdy containers plainly marked with the Manufacturer's name and address, the color of the material, date of manufacture and batch number.

Provide certification to the Engineer from the waterborne manufacturer documenting the Contractor's qualifications to place the product in a manner acceptable to the manufacturer and in compliance with the provisions of this specification.

Provide technical data from the manufacturer regarding material type and application rate to the Engineer prior to starting work.

III. Construction.

1. **Placement**. Place waterborne materials and beads according to this specification and the waterborne manufacturer's requirements. Applied markings shall be sharp and well defined and shall provide uniform application of beads.

2. **Surface Preparation.** Surface preparation requirements are dependent on surface conditions. Notes A through E apply to the application of **recessed lines, non-recessed lines and special makings**, as noted:

   A. **New hot mix asphalt (HMA)** - "New" HMA has no oil drips, residue, debris, or temporary or permanent markings. **Preparation required: Non-recessed lines and special markings-** Scarify the proposed marking area using non-milling grinding teeth or shot blasting.

   B. **New Portland cement concrete (PCC)** - "New" PCC has no oil drips, residue, and debris, temporary or permanent markings. **Preparation required: Non-recessed lines and special markings-** Remove curing compound; to be paid for separately as Removing Curing Compound.

   C. **Existing HMA or PCC surface** - There may be oil drip areas and/or debris, but no existing markings. **Preparation required: Non-recessed lines and special markings-** Scarify the proposed marking area using non-milling grinding teeth or shot blasting.

   D. **Existing HMA or PCC surface with existing non-waterborne marking** - There may be oil drips and debris. There will be an existing non-waterborne marking. **Preparation required: Non-recessed lines and special markings-** Completely remove non-waterborne markings; to be paid for as Removal of Special Markings or Removal of Longitudinal Lines.

   E. **Existing surface with existing waterborne marking-HMA or PCC -** There may be oil drip areas and or debris where there is an existing waterborne marking.
   Preparation required: Non-recessed lines and special markings: Scarify the proposed marking area using non-milling grinding teeth or shot blast or clean chemically per manufacturer's recommendations.

Occasionally an existing waterborne marking may require complete removal. When the Engineer decides complete removal is required, it will be paid for as Removal of Special Markings or Removal of Longitudinal Lines.
Conduct grinding, scarifying, sandblasting, shot blasting, or other operations in such a manner that the finished pavement surface is not damaged and does not exhibit a pattern that will mislead or misdirect the motorist. Use vacuum-type equipment or equivalent to collect and contain debris generated by this operation.

When surface preparation is complete, broom the pavement surface, and follow with compressed air cleaning to remove all residue and debris resulting from the preparation work. Control and minimize airborne dust and similar debris generated by surface preparation and cleanup to prevent a hazard to motor vehicle operation or nuisance to adjacent property.

Do not damage transverse and longitudinal joint sealers on HMA and PCC surfaces when performing removal and cleaning work.

3. **Temperature Limitations.** Use the temperature limitations recommended by the waterborne Manufacturer. Document the temperature at the start of each day of marking operation and at any other time deemed necessary by the manufacturer or the Engineer.

IV. Delayed Acceptance. See special provision "03S811 (B)", from the Michigan Department of Transportation for specific regulations.

V. Measurement and Payment. The completed work as described will be paid for at contract unit price for the following contract items (pay items):

Contract Item (Pay Item)	**Pay Unit**
"Pavt Mrkg, Waterborne, Bike Sym and Arrow, White"	Each
"Pavt Mrkg, Waterborne, Bike Sharrow Sym	Each

The contract unit price for each of these items includes all labor, material, equipment, and traffic control. Payment also includes the costs associated with corrective action as referred to in section (IV) of this special provision. Removing curing compound or existing pavement markings will be paid for separately as described in section (III.2) of this special provision.

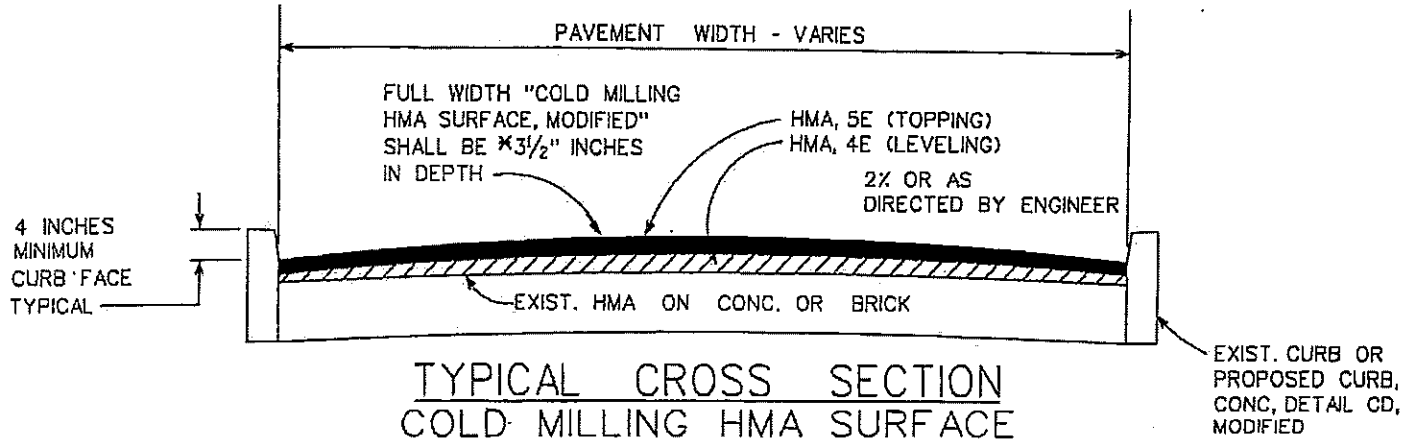

TYPICAL CROSS SECTION
COLD MILLING HMA SURFACE AND RESURFACING

NOTES:

1. THE CONTRACTOR SHALL PLACE ADDITIONAL HMA MIXTURE AT VARIOUS LOCATIONS WHERE NEEDED, IN ORDER TO MAKE A UNIFORM CROSS-SECTION. AN ADDITIONAL 10% OF HMA 5E HAS BEEN ESTIMATED TO PROVIDE MATERIAL TO RE-ESTABLISH THE PAVEMENT CROSS-SECTION AND FOR WEDGING AT MILLED STREET INTERSECTIONS.

2. "COLD MILLING HMA SURFACE, MODIFIED" SHALL APPLY ACROSS THE FULL PAVEMENT WIDTH AS SHOWN ON THE PLAN OR AS DIRECTED BY THE ENGINEER.

*3 IF EXISTING HMA OVERLAY IS LESS THAN 3½", COLD MILL THE FULL DEPTH OR AS DIRECTED BY THE ENGINEER.

PROJECT SUMMARY:

COLD MILL 3½INCHES OF EXISTING HMA SURFACE AND REPLACE WITH 2 INCHES OF 4E HMA LEVELING COURSE MIXTURE WITH A YEILD OF 220 LBS PER SQUARE YARD AND 1½INCHES OF 5E HMA WEARING COURSE MIXTURE WITH A YEILD OF 165 LBS PER SQUARE YARD. THE PROJECT ALSO INCLUDES CONCRETE CURB, SIDEWLK, CURB RAMPS, DRIVEWAY APPROACHES, DRAINAGE STRUCTURES, EXCAVATION, PAVEMENT REMOVAL, LANE TIES, PAVEMENT MARKINGS AND MISCELLANEOUS CONSTRUCTION.

HMA APPLICATION ESTIMATE

I.D. No.	Item	Rate Per syd	Est. Thick.	Performance Grade	Remarks
HMA, 5E	HMA mix. -5E	165 lb	1½INCHES	64-22	USE 5E FOR WEDGING
HMA, 4E	HMA mix. -4E	220 lb	2 INCHES	64-22	
HAND PATCHING	HMA mix. -5E	330 lb	3 INCHES	64-22	FOR RATE AND PG SEE HMA APPLICATION ESTIMATE
HMA APPROACH, MODIFIED	HMA mix. 5E & HMAX mix. 4E	165 lb	1½INCHES	64-22	
		220 lb	2 INCHES	64-22	
HMA SHOULDER, MODIFIED	HMA mix. -5E	330 lb	3 INCHES	64-22	

HMA Bond Coat at the rate of 0.05 to 0.15 Gal./Syd. -Included in the pay item "HMA, 4E"
Also Applies to HMA Approaches for Street Intersections

B					
A					
	DESCRIPTION	Drwn	Chkd	Appd	Date
	REVISIONS				
DRAWN BY K.S.M.	APPROVED				
TRACED BY	APPROVED				
CHECKED BY J.J.	APPROVED	CITY ENGINEER			

TYPICAL CROSS SECTION
COLD MILLING HMA
SURFACE AND RESURFACE

CITY OF DETROIT
City Engineering Division

Job No.
Drwg. No.
Date JUNE, 09

::\details 2011\4c3c.dgn Apr. 19, 2011 14:32:05

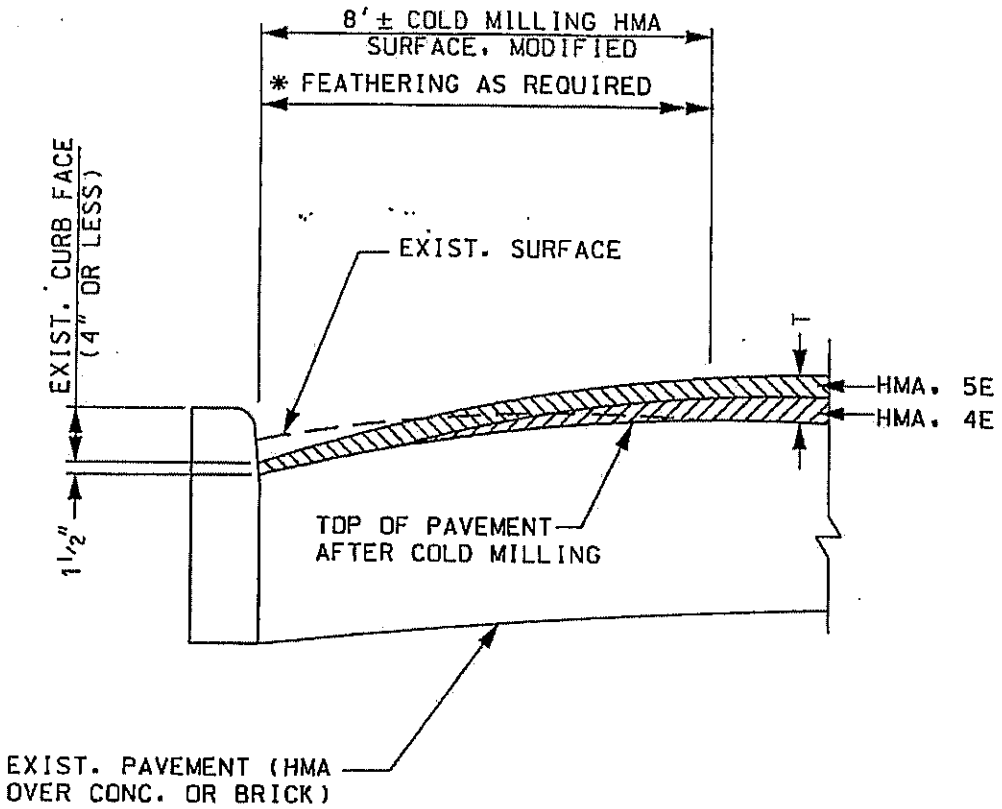

*"COLD MILLING HMA SURFACE MODIFIED", SO AS TO GET A 5 1/2" EXPOSED (VERTICAL) FACE OF CURB. FEATHER RESURFACING TO 1 1/2" THICKNESS AT THE CURB LEAVING A MINIMUM OF 4" EXPOSED CURB FACE.

T = THICKNESS OF HMA RESURFACING.

NOTE:

THIS DETAIL SHALL BE USED WHERE DIRECTED BY THE ENGINEER. TO OBTAIN ADDITIONAL CURB FACE EXPOSURE. (CURB FACE EXPOSURE AFTER RESURFACING SHALL BE A MINIMUM OF 4" THIS SHALL APPLY THROUGHOUT THE LENGTH OF THE PROJECT.)

B					
A					
	DESCRIPTION	Drwn	Chkd	Appd	Date
	REVISIONS				

DRAWN BY K.S.M.	APPROVED
TRACED BY	APPROVED
CHECKED BY J.J.	APPROVED CITY ENGINEER

HMA FEATHERING DETAIL

CITY OF DETROIT
City Engineering Division

Job No.

Drwg. No.

Date DEC. 06

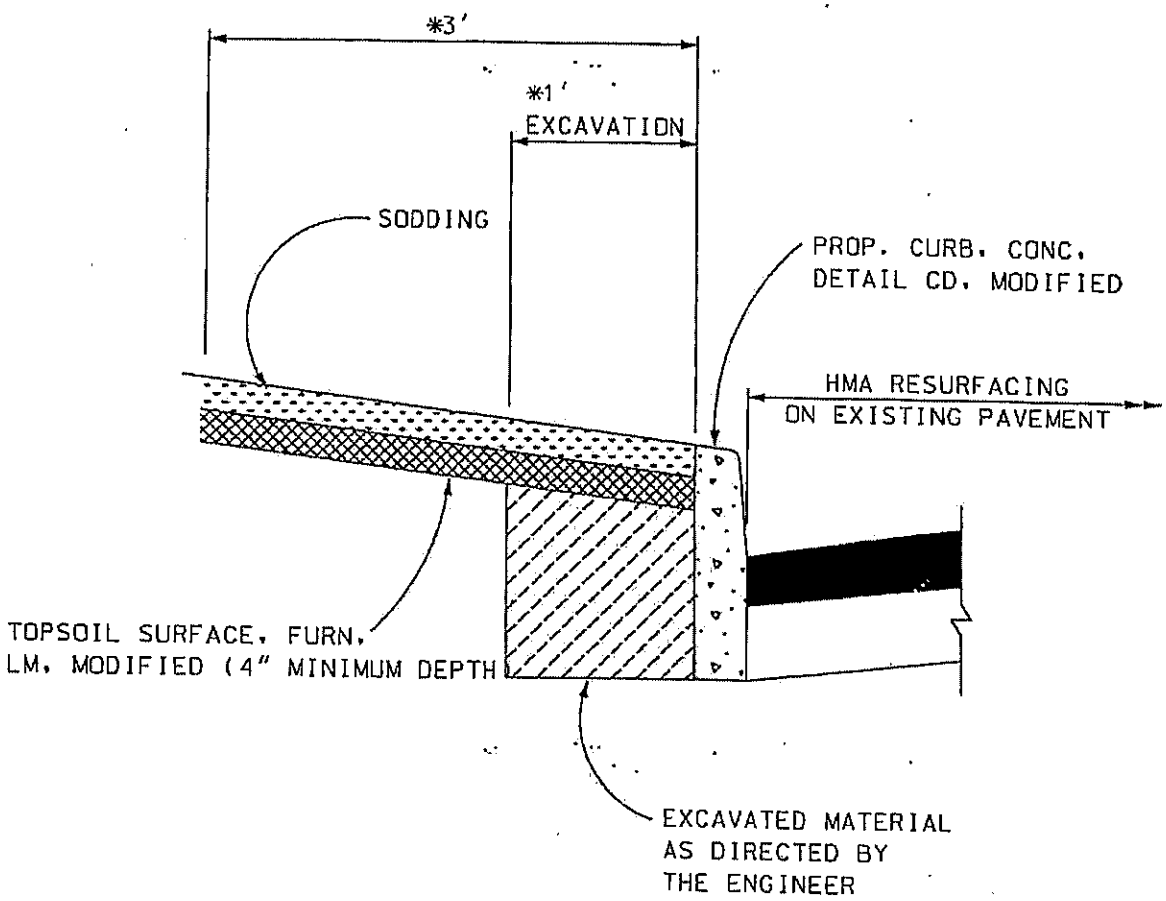

NOTE:

* PAY LIMITS UNLESS OTHERWISE DIRECTED BY THE ENGINEER. THE ITEMS OF EXCAVATION AND SELECTED EXCAVATED MATERIAL WILL BE INCLUDED IN THE PAY ITEM OF CURB, CONC, DETAIL CD, MODIFIED

B					
A					
	DESCRIPTION	Drwn	Chkd	Appd	Date
	REVISIONS				

DRAWN BY K.S.M.	APPROVED
TRACED BY	APPROVED
CHECKED BY N.H.	APPROVED CITY ENGINEER

CURB REPLACEMENT AREAS WITH LAWN ABUTTING CURB

CITY OF DETROIT
City Engineering Division

Job No.

Drwg. No.

Date JAN. 06

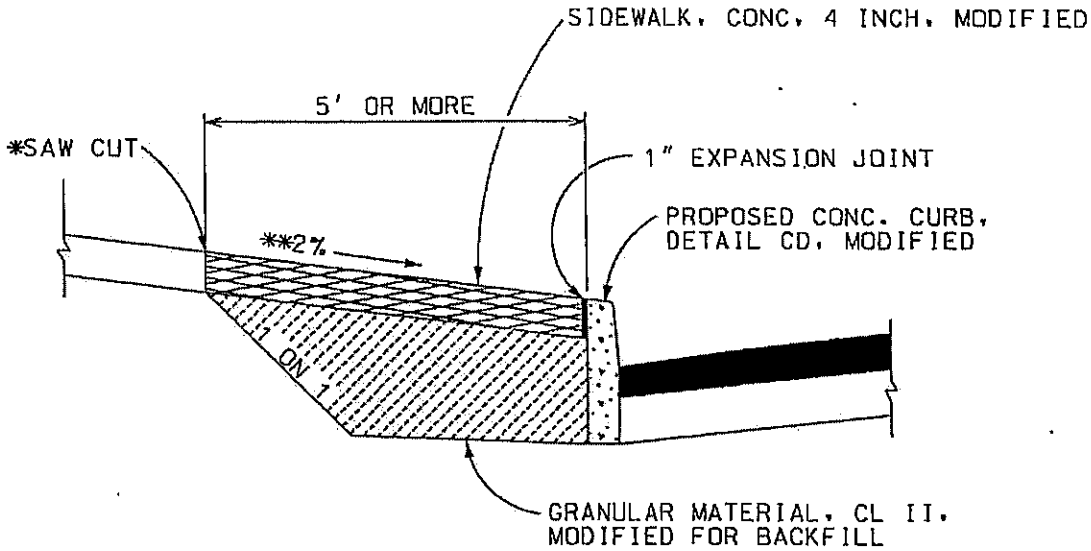

NOTE:

* IF SAWCUT IS LESS THAN 5'+ FROM BACK OF CURB, CONCRETE CURB AND CONCRETE SIDEWALK SHALL BE CONSTRUCTED INTEGRALLY.
THE ITEMS OF SAW CUT AND 1" EXPANSION JOINT WILL BE INCLUDED IN THE PAY ITEM OF SIDEWALK, CONC. 4 INCH OR 6 INCH, MODIFIED.

THE ITEM OF GRANULAR MATERIAL, CL II, MODIFIED UNDER CONCRETE SIDEWALK WILL BE PAID FOR WHEN CONCRETE SIDEWALK IS CONSTRUCTED IN THE BERM AREA BETWEEN THE CURB AND EXISTING SIDEWALK.

** SIDEWALK SLOPE SHALL BE 2% UNLESS OTHERWISE APPROVED BY THE ENGINEER.

B						
A	ADDED 2% S/W SLOPE	K.S.M.		J.J.	12/06	
	DESCRIPTION	Drawn	Chkd	Appd	Date	
	REVISIONS					

DRAWN BY K.S.M.	APPROVED
TRACED BY	APPROVED
CHECKED BY N.H.	APPROVED CITY ENGINEER

CURB REPLACEMENT AREAS WITH CONCRETE SIDEWALK ABUTTING CURB

CITY OF DETROIT
City Engineering Division

Job No.

Drwg. No.

Date JAN. 06

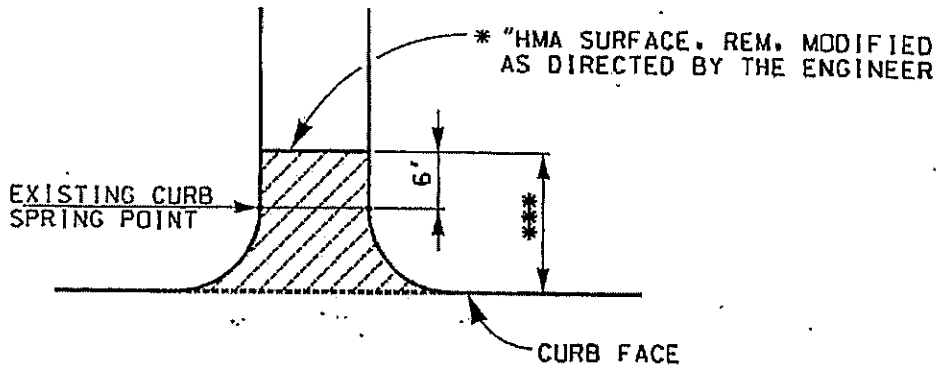

*** RESURFACING STREET RETURNS SHALL BE PAID FOR AS "HMA APPROACH, MODIFIED"

* REMOVING HMA SURFACE AREA MAY BE A 6' ± WIDE STRIP BACK OF THE SPRING POINT (SOLID LINES) OR THE ENTIRE RETURN AREA (SOLID AND DASHED LINES) AS DIRECTED BY THE ENGINEER.

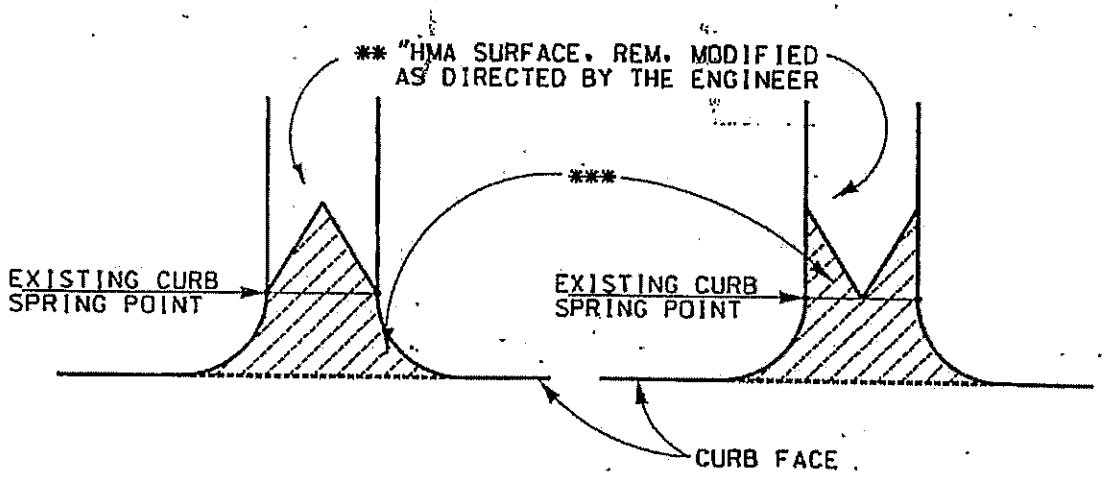

** REMOVING HMA SURFACE AREA MAY BE DEFINED BY TRIANGULAR CUTS SHOWN OR MAY OTHERWISE VARY AS DIRECTED BY THE ENGINEER TO SATISFY CROWN TRANSITION OR DRAINAGE CONDITIONS.

(THESE DETAILS SHALL BE USED AT MAJOR CROSS STREETS AND ELWHERE AS DIRECTED BY THE ENGINEER.)

B					
A					
	DESCRIPTION	Drwn	Chkd	Appd	Date
	REVISIONS				

DRAWN BY K.S.M.	APPROVED
TRACED BY	APPROVED
CHECKED BY J.J.	APPROVED CITY ENGINEER

HMA APPROACH, MODIFIED

CITY OF DETROIT
City Engineering Division

Job No.

Drwg. No.

Date DEC. 06

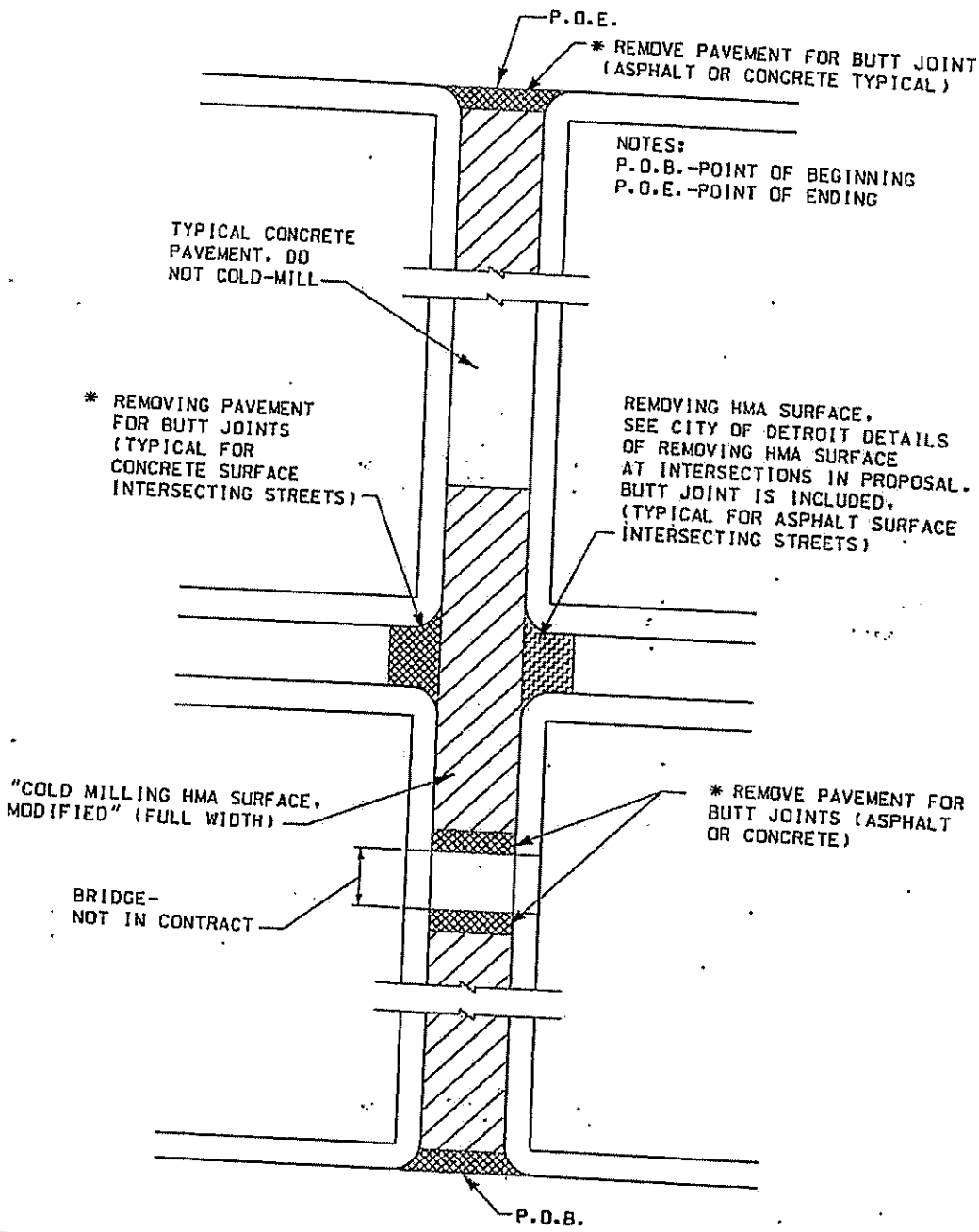

* REMOVING PAVEMENT FOR BUTT JOINTS WILL BE PAID FOR AS "PAVT FOR BUTT JOINTS, REM.".

B					
A					
	DESCRIPTION	Drwn.	Chkd	Appd	Date

REVISIONS

DRAWN BY K.S.M.	APPROVED
TRACED BY J.P.	APPROVED
CHECKED BY	APPROVED CITY ENGINEER

TYPICAL RESURFACING PLAN

NO SCALE

CITY OF DETROIT
City Engineering Division

Job No.

Drwg. No.

Date JULY 09

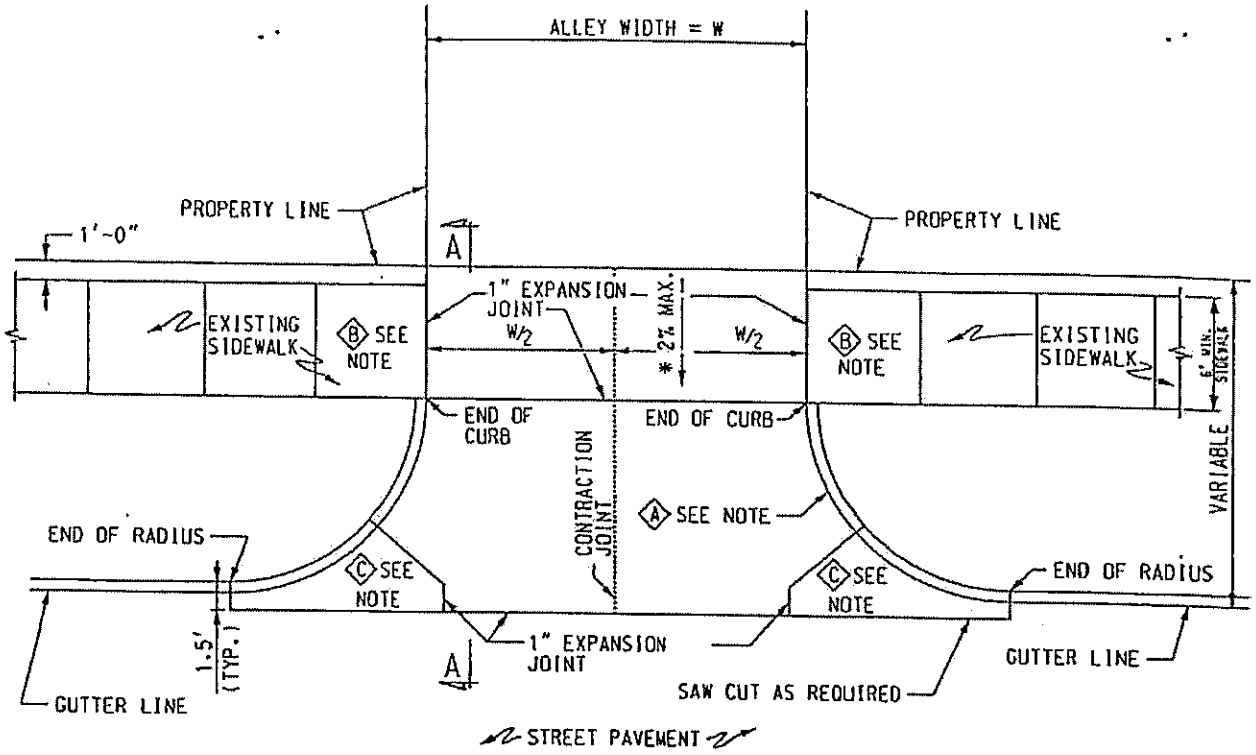

ALLEY RETURN OR COMMERCIAL DRIVE APPROACH

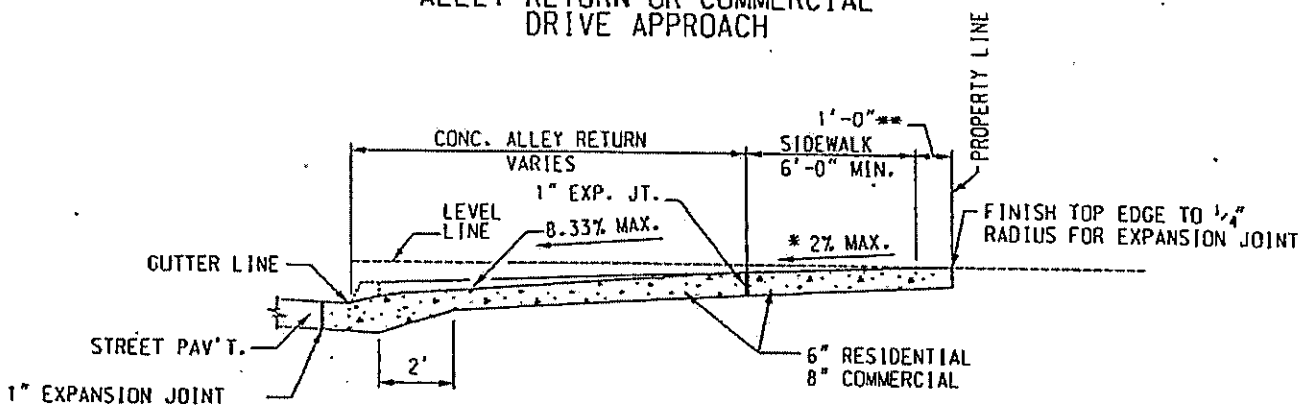

SECTION A-A

C					
B	* SIDEWALK CROSS SLOPE	KSM	J.J.		2/7/01
A	METRIC TO ENGLISH UNIT SYSTEM	KSM	M.S.	N.H.	12/02
	DESCRIPTION	Drwn	Chkd	Appd	Date

REVISIONS

PREPARED BY BUREAU OF STREETS AND HIGHWAYS

K.S.M. DRAWN BY:

J.J. CHECKED BY:

APPROVED

Sam Patel
ENGINEER OF STREETS

HEAD ENGINEER
Jerry Sands
CITY ENGINEER

CITY OF DETROIT
CITY ENGINEERING DIVISION. D.P.W.
STANDARD PLAN FOR
DETAIL OF ALLEY RETURN AND DRIVE APPROACH

03/07/98 PLAN DATE	DRAWING NO. 7	DETAIL STANDARD NO. C-4384	SHEET 1 OF 2

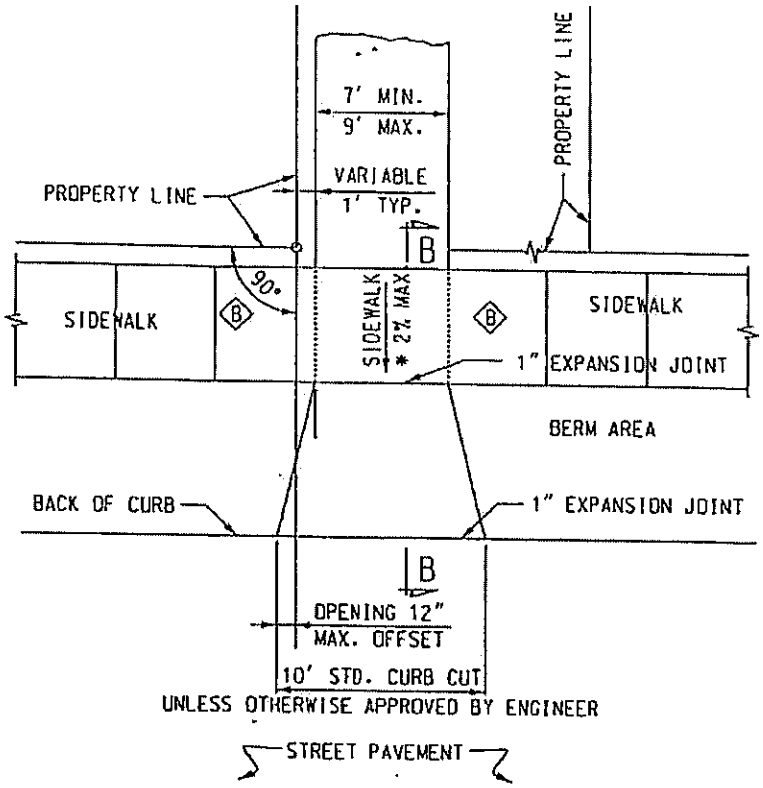

DETAIL OF CURB CUT OPENINGS FOR RESIDENTIAL DRIVEWAY

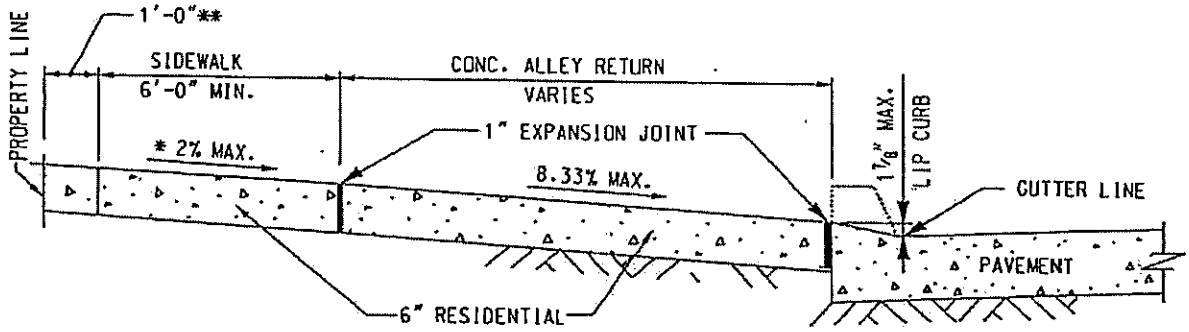

SECTION B-B

NOTES:

IF ALLEY IS PAVED. CONSTRUCT RETURN WITH 1" EXPANSION JOINT ON PROPERTY LINE.

(A) RADIUS TO BE 10' UNLESS OTHERWISE SHOWN ON PAVING PLAN.

(B) SIDEWALK FLAGS ABUTTING ALLEY SHALL BE 6" THICK. SIDEWALK SHALL BE REPLACED FOR A SMOOTH TRANSITION AND TO ATTAIN A CROSS SLOPE OF 2% MAX. OR AS DIRECTED BY THE ENGINEER.

(C) KEY JOINT OR "B" JOINT IF REINFORCED PAVEMENT.

ALL DIMENSIONS ARE IN INCHES(") UNLESS OTHERWISE NOTED.

* SIDEWALK CROSS SLOPE SHALL BE 2% MAX. OR AS DIRECTED BY THE ENGINEER.

** THE SLOPE OF THE DRIVEWAY IN THE 1 FT. SPACE ADJACENT TO THE PROPERTY LINE MAY BE ALTERED UP TO 10% TO MEET EXISTING CONDITIONS.

REVISED DATE(METRIC TO ENGLISH UNIT SYSTEM):DEC.2002

C					
B	* SIDEWALK CROSS SLOPE	KSM	J.J.		2/7/07
A	Chgd. THICKNESS NOTE	KSM	N.H.	W.T.	10/06
	DESCRIPTION	Dwn	Chkd	Appd	Date

REVISIONS

CITY OF DETROIT
CITY ENGINEERING DIVISION. D.P.W.
STANDARD PLAN FOR
DETAIL OF ALLEY RETURN AND DRIVE APPROACH

PLAN DATE	DRAWING NO.	DETAIL STANDARD NO.	SHEET
03/07/98	7	C-4384	2 OF 2

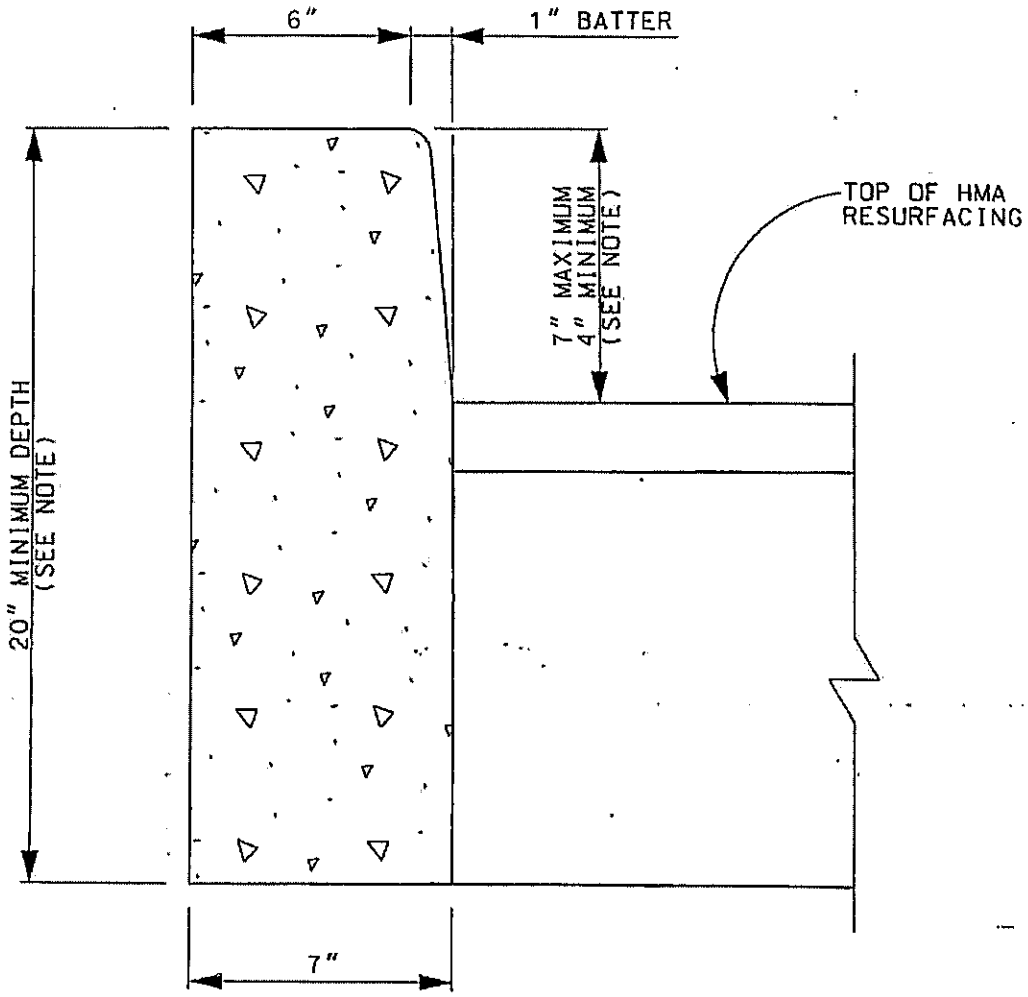

NOTE:

DEPTH OF CURB SHALL BE 20" UNLESS OTHERWISE DIRECTED BY THE ENGINEER.

B					
A					
DESCRIPTION		Drwn	Chkd	Appd	Date
REVISIONS					
DRAWN BY	K.S.M.	APPROVED			
TRACED BY		APPROVED			
CHECKED BY	N.H.	APPROVED		CITY ENGINEER	

CURB, CONC., DETAIL CD, MODIFIED

CITY OF DETROIT
City Engineering Division

Job. No.

Drwg. No.

Date JAN. 06

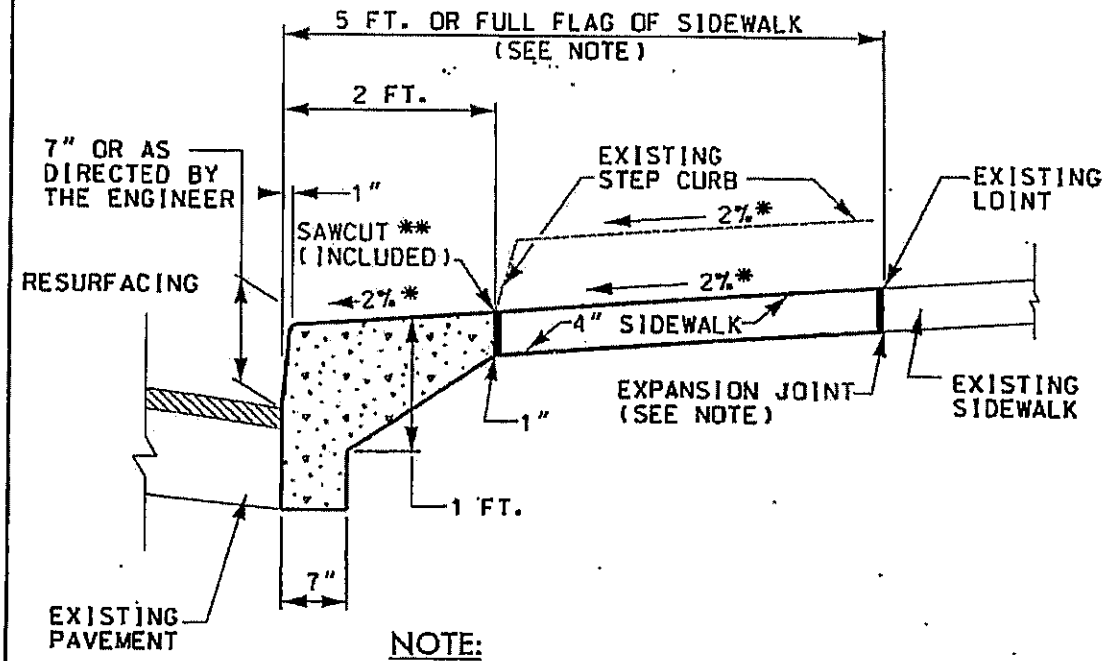

NOTE:

WHERE THE WIDTH OF THE NEW INTEGRAL CURB AND SIDEWALK IS MORE THAN 2 FT., PROVIDE A 1" EXPANSION JOINT ALONG THE 2 FT. WIDTH OR AS DIRECTED BY THE ENGINEER.

* SIDEWALK SLOPE SHALL BE 2% UNLESS OTHERWISE APPROVED BY THE ENGINEER.

** SAWCUT IS INCLUDED IN THE PAY ITEM INTEGRAL CURB AND SIDEWALK, 2 FEET MODIFIED.

B					
A					
DESCRIPTION		Drwn	Chkd	Appd	Date
REVISIONS					
DRAWN BY K.S.M	APPROVED				
TYPED BY J.P.	APPROVED				
CHECKED BY	APPROVED	CITY ENGINEER			

INTEGRAL CURB AND SIDEWALK

REPLACES SAME TITLE 1/06

CITY OF DETROIT
City Engineering Division

Job No.

Drwg. No.

Date JULY 09

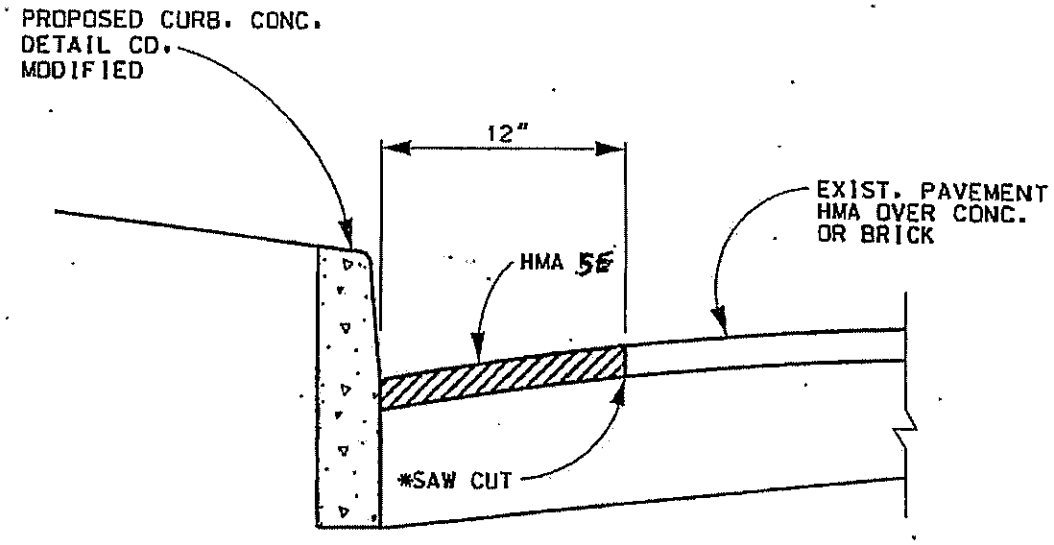

NOTES:

* THE ITEM OF SAW CUT WILL BE INCLUDED IN THE PAY ITEM OF
  1. HMA SURFACE, REM, MODIFIED
  2. HAND PATCHING

THIS DETAIL SHALL BE USED AT LOCATIONS WHERE PROPOSED CURB IS CONSTRUCTED ADJACENT TO EXISTING HMA PAVEMENT NOT TO BE RESURFACED.

B					
A					
	DESCRIPTION	Date	Chkd.	Appd.	Date
	REVISIONS				

DRAWN BY K.S.M.	APPROVED	HMA PATCHING AT PROPOSED CURB, CONC, DETAIL CD, MODIFIED	CITY OF DETROIT City Engineering Division
EDITED BY J.P.	APPROVED		Job No.
CHECKED BY	APPROVED CITY ENGINEER		Drwg. No.
			Date JULY 09

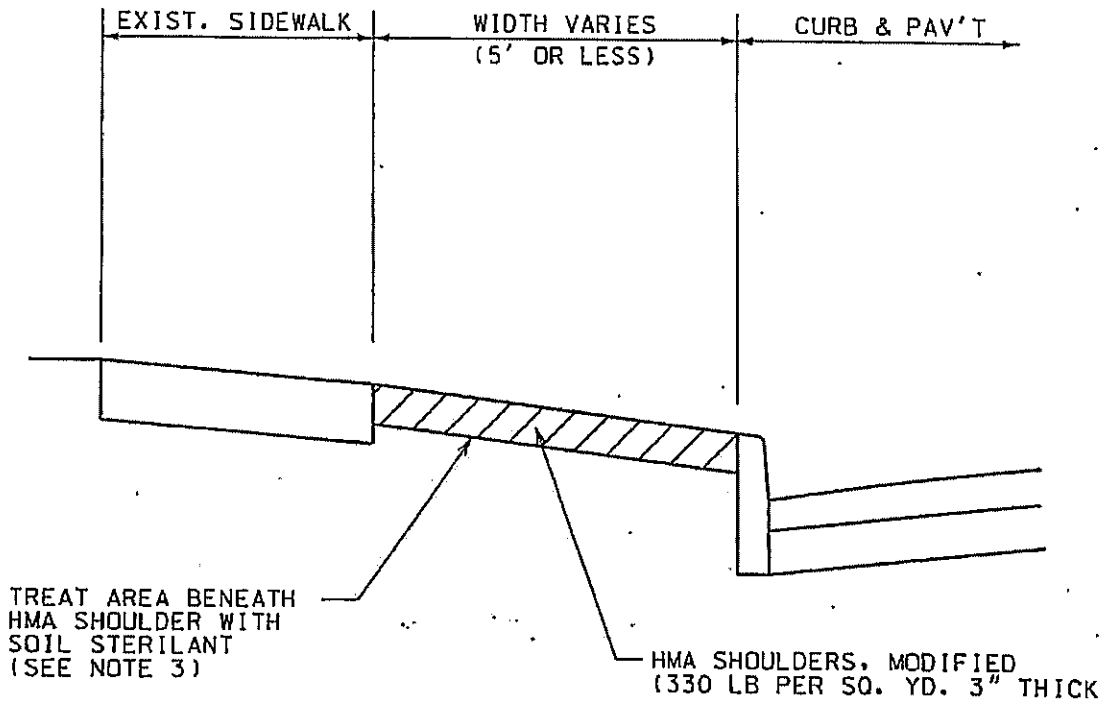

NOTE:

1. THE MIXTURE FOR HMA SHOULDERS SHALL BE OF THE SAME MIXTURE AS SPECIFIED FOR THE LEVELING OR THE TOP COARSE.

2. THE MATERIAL FOR HMA SHOULDERS SHALL BE IN ACCORDANCE WITH SECTION 501 OF THE ~~2003~~ 2012 MDOT STANDARD SPECIFICATIONS FOR CONSTRUCTION.

3. THE MATERIAL FOR SOIL STERILANT SHALL BE IN ACCORDANCE WITH SUB SECTION 201.02 OF THE ~~2003~~ 2012 MDOT STANDARD SPECIFICATIONS FOR CONSTRUCTION.

B					
A					
	DESCRIPTION	Drwn.	Chkd	Appd	Date
	REVISIONS				

DRAWN BY K.S.M.	APPROVED
EDITED BY J.P.	APPROVED
CHECKED BY	APPROVED CITY ENGINEER

HMA SHOULDER DETAIL

CITY OF DETROIT
City Engineering Division

Job No.

Drwg. No.

Date JULY 09

N.I.C

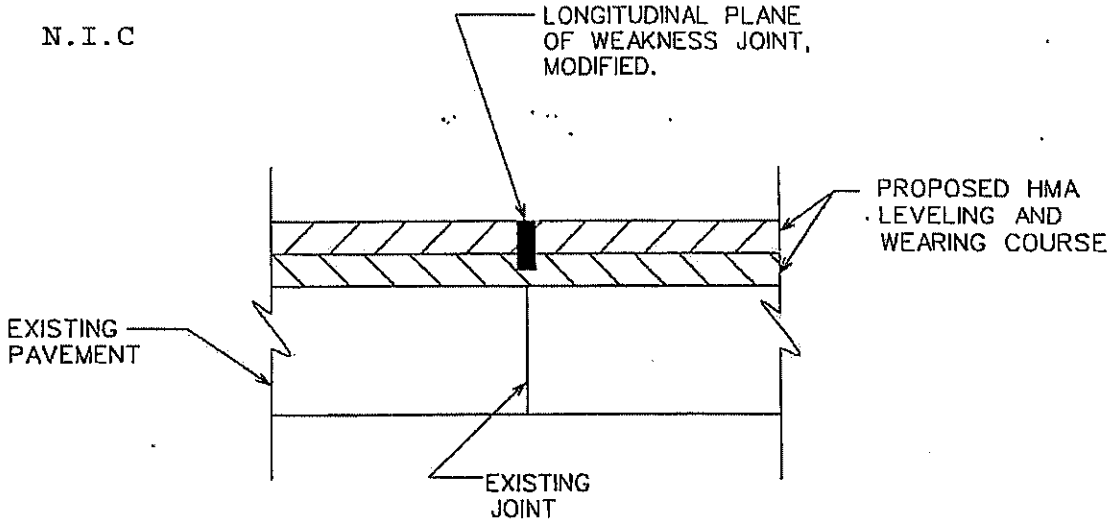

NOTES:

SAW PROPOSED HMA SURFACE MIN. 2" IN DEPTH AND MIN. 1/8" IN WIDTH AS DIRECTED BY THE ENGINEER. THE JOINT SHALL BE SEALED WITH COLD OR HOT APPLIED JOINT SEALANT. THE JOINT SEALANT, EQUIPMENT AND METHOD OF APPLICATION SHALL BE IN ACCORDANCE WITH THE ~~2003~~ 2012 MDOT STANDARD SPECIFICATION FOR CONSTRUCTION, SUBSECTIONS 914.04, 602.03-A13 AND 602.03-54 RESPECTIVELY.

THE WORK OF SAWING AND SEALING LONGITUDINAL PLANE OF WEAKNESS JT, WILL BE DETERMINED BY LENGTH IN LINEAR FEET AND PAID FOR AT THE CONTRACT UNIT PRICE FOR "LONGITUDINAL PLANE OF WEAKNESS JT, MODIFIED"

B					
A					
	DESCRIPTION	Drwn	Chkd	Appd	Date
	REVISIONS				

DRAWN BY K.S.M.	APPROVED
TRACED BY	APPROVED
CHECKED BY N.H.	APPROVED CITY ENGINEER

LONGITUDINAL PLANE OF WEAKNESS JT, MODIFIED

CITY OF DETROIT
City Engineering Division

Job No.

Drwg. No.

Date JAN. 06

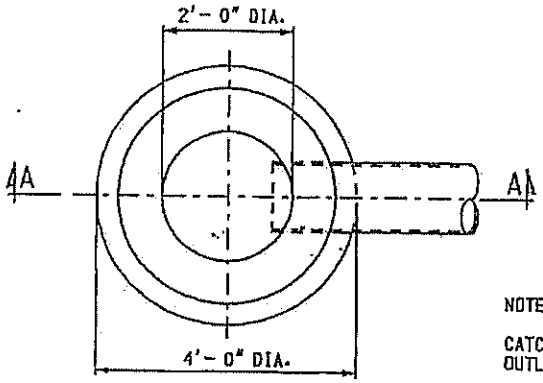

NOTE:

CATCH BASIN "A" WILL BE USED ONLY WHEN OUTLETTING TO A CATCH BASIN "B".

PLAN VIEW

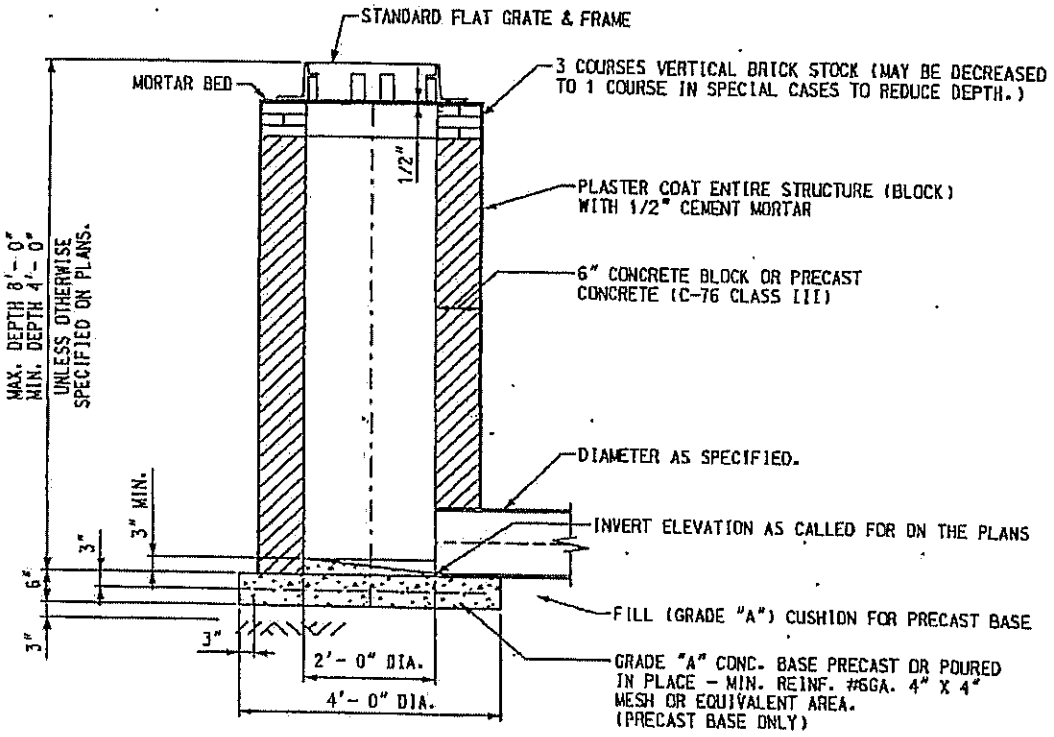

SECTION A-A

CATCH BASIN "A"

REVISED DATE(METRIC TO ENGLISH UNIT SYSTEM):DEC.2002

PREPARED BY BUREAU OF STREETS AND HIGHWAYS	rev. K.S.M. DRAWN BY: M.F.S. CHECKED BY:	APPROVED ENGINEER OF STREETS / HEAD ENGINEER / CITY ENGINEER	CITY OF DETROIT CITY ENGINEERING DIVISION. D.P.W. STANDARD PLAN FOR CATCH BASINS "A" AND "B" AND FLAT GRATE AND FRAME

03/07/98 PLAN DATE	DRAWING NO. 35	DETAIL STANDARD NO. C-5028	SHEET 1 OF 7

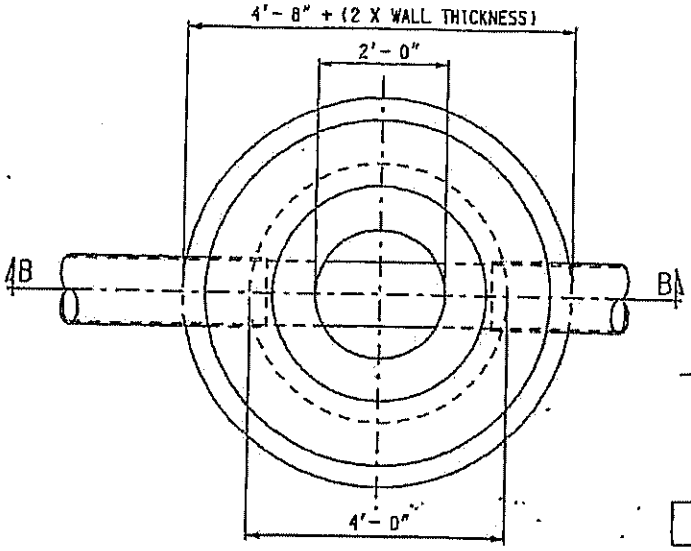

PLAN VIEW

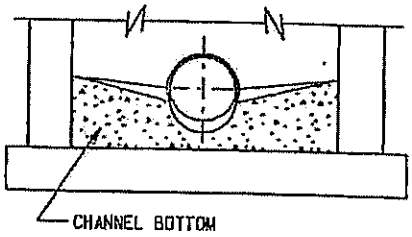

SECTION C-C

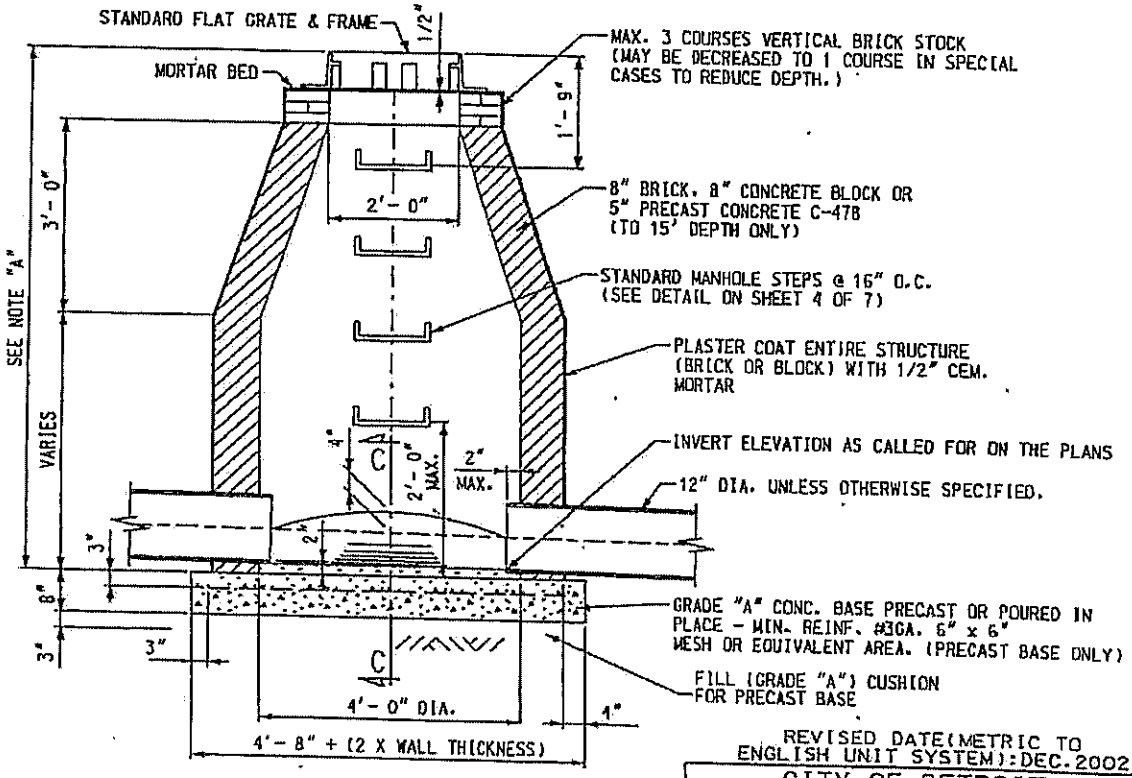

SECTION B-B

CATCH BASIN "B"

NOTE "A":

WALL THICKNESS SHALL BE 8" FROM THE TOP OF STRUCTURE TO A DEPTH OF 15'. BELOW 15' THE THICKNESS OF THE WALL SHALL BE 12"

REVISED DATE(METRIC TO ENGLISH UNIT SYSTEM):DEC.2002

CITY OF DETROIT
CITY ENGINEERING DIVISION, D.P.W.
STANDARD PLAN FOR

CATCH BASINS "A" AND "B" AND FLAT GRATE AND FRAME

03/07/98 PLAN DATE	DRAWING NO. 35	DETAIL STANDARD NO. C-5028	SHEET 2 OF 7

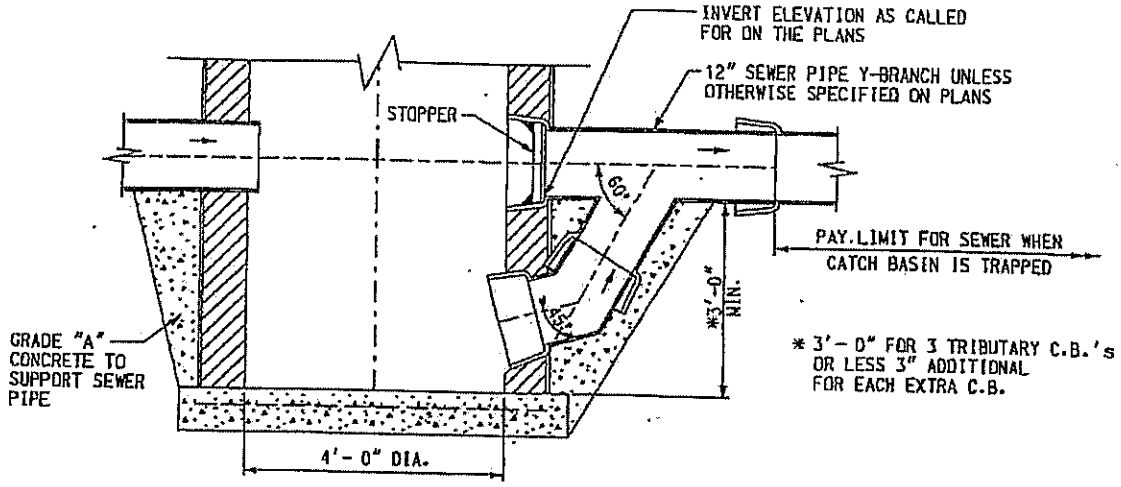

NOTES:

SEWER TRAP TO BE OF THE SAME MAT'L. & STRENGTH AS THE OUTLET SEWER PIPE.

TRAP SHALL BE SUPPORTED BY BLOCKING OR ANY OTHER MEANS UNTIL CATCH BASIN IS COMPLETED AND CONCRETE OR MORTAR AROUND BRICK IS SET. ANY VOIDS BETWEEN THE TRAP AND GROUND UNDERNEATH SHALL BE FILLED WITH GRADE "A" CONCRETE

DETAIL OF TRAP FOR CATCH BASIN "B"

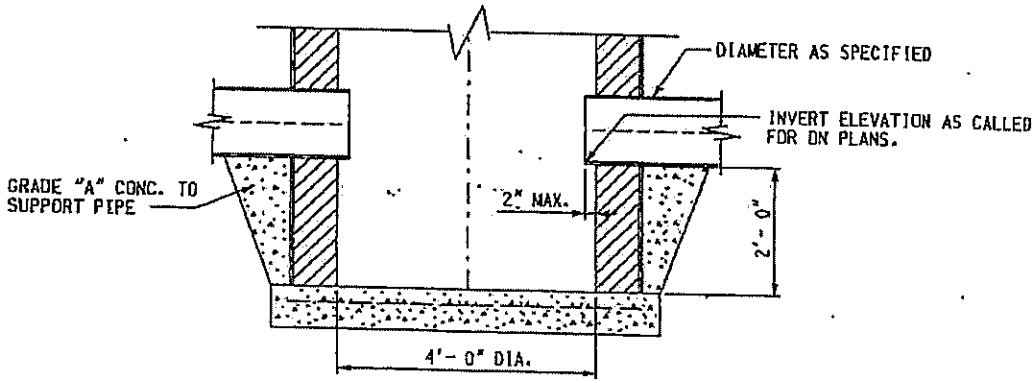

DETAIL OF SUMP FOR CATCH BASIN "B"

CITY OF DETROIT
CITY ENGINEERING DIVISION. D.P.W.
STANDARD PLAN FOR
CATCH BASINS "A" AND "B" AND FLAT GRATE AND FRAME

REVISED DATE(METRIC TO ENGLISH UNIT SYSTEM):DEC.2002

03/07/98 PLAN DATE	DRAWING NO. 35	DETAIL STANDARD NO. C-5028	SHEET 3 OF 7

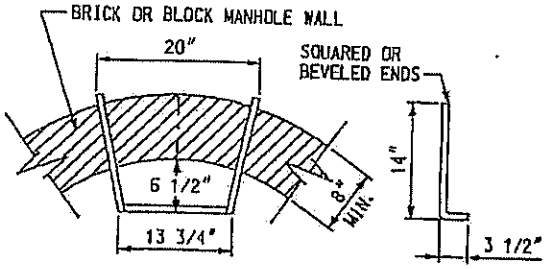

PLAN VIEW
(USE WITH BRICK OR BLOCK M.H.)

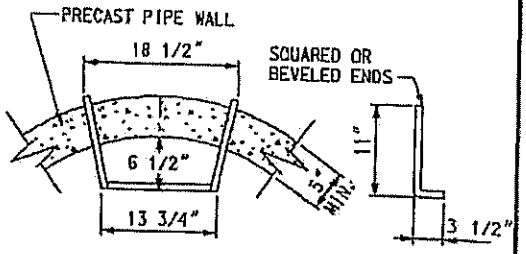

PLAN VIEW
(USE WITH PRECAST M.H. UNITS)

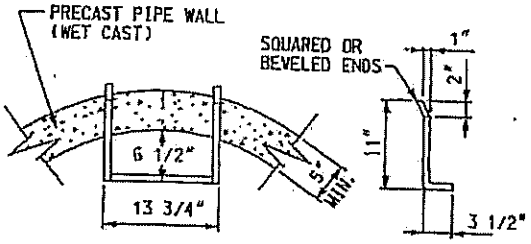

PLAN VIEW
(USE WITH WET CAST M.H. UNITS)

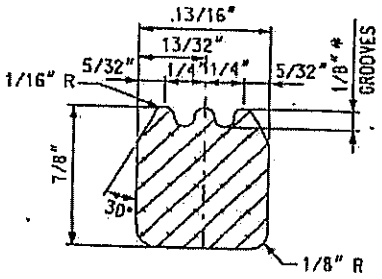

CROSS - SECTION

*NOTE:

IN LIEU OF GROOVES, ALTERNATE FOOT HOLD CONFIGURATIONS WILL BE CONSIDERED FOR APPROVAL.

ALUMINUM MANHOLE STEP STANDARD DETAILS

NO SCALE.

NOTES:

1. MANHOLE STEPS SHALL CONFORM TO THE REQUIREMENTS FOR "ALUMINUM ALLOY EXTRUDED BARS, RODS, SHAPES AND TUBES", A.S.T.M. B221 (CURRENT), ALLOY 6061, TEMPER T-6 OR APPROVED EQUAL.
2. EITHER THE FLARED LEG OR PARALLEL LEG STEP MAY BE USED FOR POURED IN PLACE CONCRETE CONSTRUCTION OR IN WET CAST MANHOLE UNITS.
3. THE PARALLEL LEG STEP SHALL BE USED IN EXISTING STRUCTURES BY PLACING IN DRILLED HOLES AND GROUTING WITH NON-SHRINK GROUT.

REVISED DATE(METRIC TO ENGLISH UNIT SYSTEM):DEC.2002

CITY OF DETROIT
CITY ENGINEERING DIVISION, D.P.W.
STANDARD PLAN FOR
CATCH BASINS "A" AND "B"
AND FLAT GRATE AND FRAME

03/07/98 PLAN DATE	DRAWING NO. 35	DETAIL STANDARD NO. C-5028	SHEET 4 OF 7

GENERAL NOTES

1. CENTER OF CATCH BASIN SHALL BE 20 INCHES FROM BACK OF CURB.
2. ALL SIZES AND FLOW LINES OF PIPES, AND ELEVATIONS FOR TOP AND BOTTOM OF STRUCTURES SHALL BE DETERMINED FROM THE PLANS OR CONSTRUCTION REQUIREMENTS.
   THE BELL SHALL BE REMOVED FROM THE FIRST LENGTH OF OUTLET PIPE PROJECTING THROUGH THE WALL OF THE STRUCTURES WHEN ANY STRUCTURE IS CONSTRUCTED OF PRECAST CONCRETE OR CONCRETE BLOCK. THE TOP OF THE MASONRY SHALL BE LEFT SUFFICIENTLY LOW TO PERMIT PROPER ADJUSTMENT OF THE COVER TO GRADE BY THE USE OF MORTAR OR BRICKS AS DIRECTED BY THE ENGINEER.
3. A TRAP, AS DETAILED ON SHEET 3 OF 7, SHALL BE PLACED WHERE CALLED FOR IN THE OUTLET SEWER LINE OF CATCH BASINS "B". THIS TRAP SHALL BE SET INTO THE MASONRY WALL AS SHOWN ON THE DETAIL.
   THE SPACE BETWEEN THE FACES OF THE WALL AND THE TRAP SHALL BE COMPLETELY FILLED WITH CEMENT, MORTAR OR CONCRETE, SO AS TO HOLD TRAP SECURELY IN PLACE.
4. THE MATERIALS AND WORKMANSHIP SHALL BE IN ACCORDANCE WITH THE CURRENT STANDARD SPECIFICATIONS FOR PAVING AND RELATED CONSTRUCTION EXCEPT AS NOTED ON THIS SHEET AND ON THE PLANS.
5. A PLASTER COAT OF MORTAR 1/2" IN THICKNESS SHALL BE APPLIED TO THE OUTER SURFACE OF THE STRUCTURE AS SHOWN. A 1/2" CEMENT PLASTER COAT SHALL BE PLACED ON THE INSIDE OF ALL SUMPS.
6. CONTRACTOR SHALL VERIFY ELEVATIONS OF EXISTING UTILITIES TO ENABLE CONSTRUCTION TO INDICATED ELEVATIONS SHOWN ON DRAWINGS. IF NECESSARY, INVERT ELEVATIONS SHOWN ON THE DRAWINGS MAY BE ALTERED IN THE FIELD TO CLEAR EXISTING UTILITIES. SUCH ALTERATIONS, UPWARD OR DOWNWARD, SHALL BE AT NO CHANGE IN CONTRACT PRICE.
7. WHEN PRECAST CONCRETE PIPE SECTIONS ARE USED FOR CATCH BASINS, EITHER A SECTION OF THE INLET AND OUTLET PIPES OR AN OPENING OR EYE FOR THE INLET AND OUTLET PIPES SHALL BE CAST INTO THE WALL OF THE CATCH BASIN PIPE WHEN IT IS BEING MANUFACTURED. EYES IN PRECAST PIPE SECTIONS SHALL BE FURNISHED TO ACCOMODATE A FLEXIBLE JOINT CONNECTION SUCH AS PRESS-WEDGE BY PRESS SEAL GASKET CORP. OR RES-SEAL BY SCALES MFG. CORP.
8. PAY LIMIT FOR SEWERS SHALL BE INSIDE FACES OF STRUCTURES UNLESS OTHERWISE NOTED.
9. ALL DIMENSIONS ARE IN INCHES(") UNLESS OTHERWISE NOTED.

REVISED DATE(METRIC TO ENGLISH UNIT SYSTEM):DEC.2002

CITY OF DETROIT
CITY ENGINEERING DIVISION, D.P.W.
STANDARD PLAN FOR
CATCH BASINS "A" AND "B"
AND FLAT GRATE AND FRAME

03/07/98 PLAN DATE	DRAWING NO.	DETAIL STANDARD NO.	SHEET
	35	C-5028	7 OF 7

ERGO Assembly

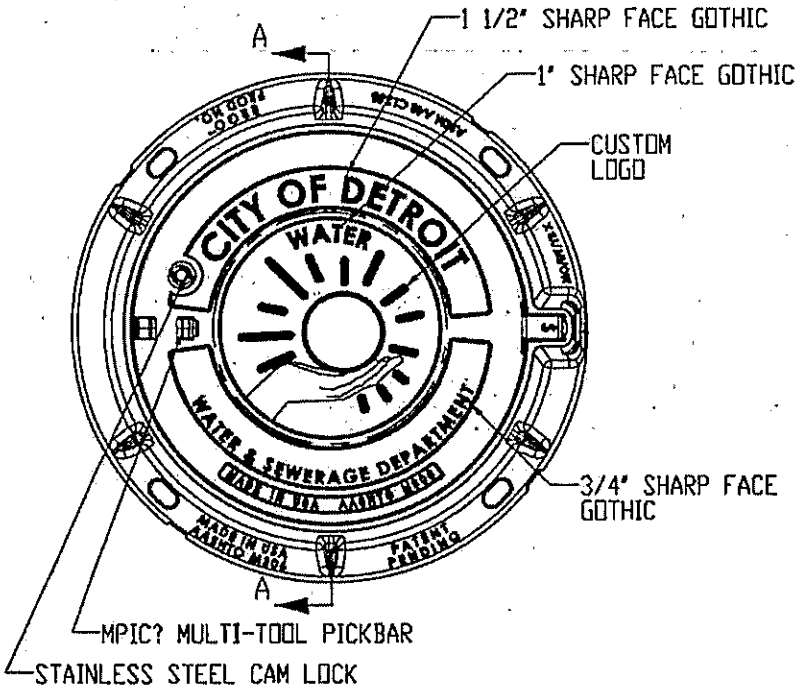

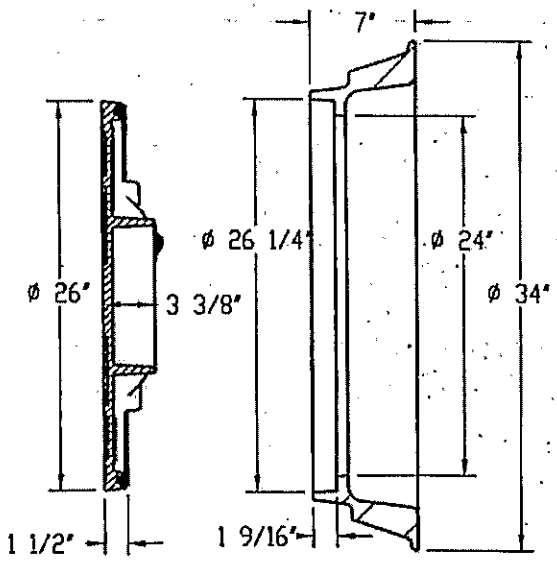

SECTION A-A

DESIGN FEATURES
-MATERIALS
COVER: DUCTILE IRON (80-55-06)
FRAME: GRAY IRON (CL35)

-DESIGN LOAD: HEAVY DUTY
-OPEN AREA: N/A
-COATING: UNDIPPED
- DESIGNATES MACHINED SURFACE

CERTIFICATION
-ASTM A536
-ASTM A48
-COUNTRY OF ORIGIN: USA

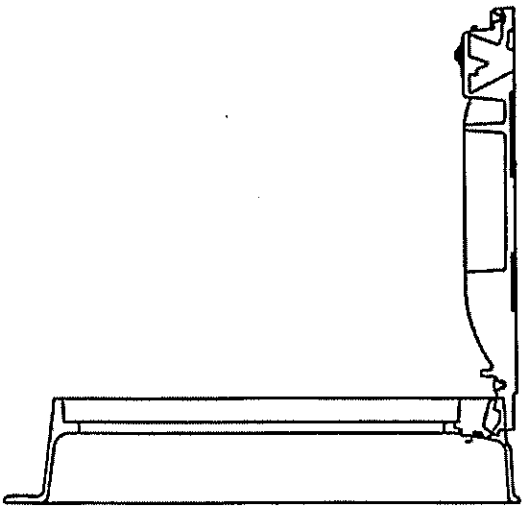

SAFETY LOCK @ 90°

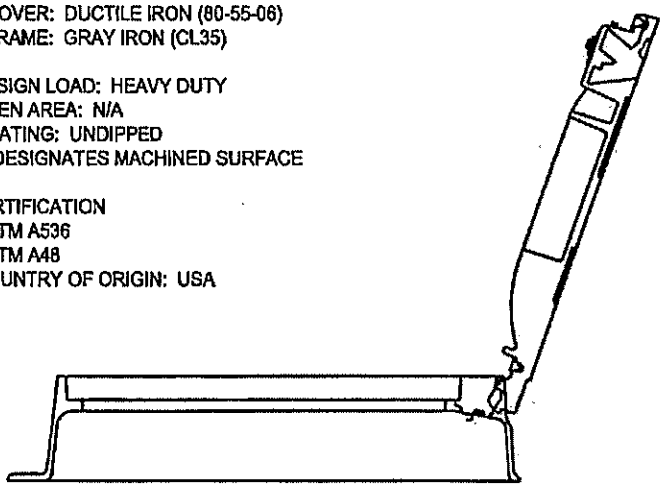

FULLY OPENED & REMOVAL POSITION @ 120°

DWSD APPROVAL: [signature] DATE: 04/16/14

CITY OF DETROIT CITY ENGINEERING DIVISION DPW	DWSD MANHOLE ERGO ASSEMBLY	APPROVED: [signature] 4/16/14 ENGINEER OF STREETS [signature] 4/16/14 CITY ENGINEER	SHEET 1 OF 1 DETAIL STD. No. DRAWING No. 101 DRAWN BY: N.Y. SANTOS DATE: 0/15/2014

ERGO Assembly

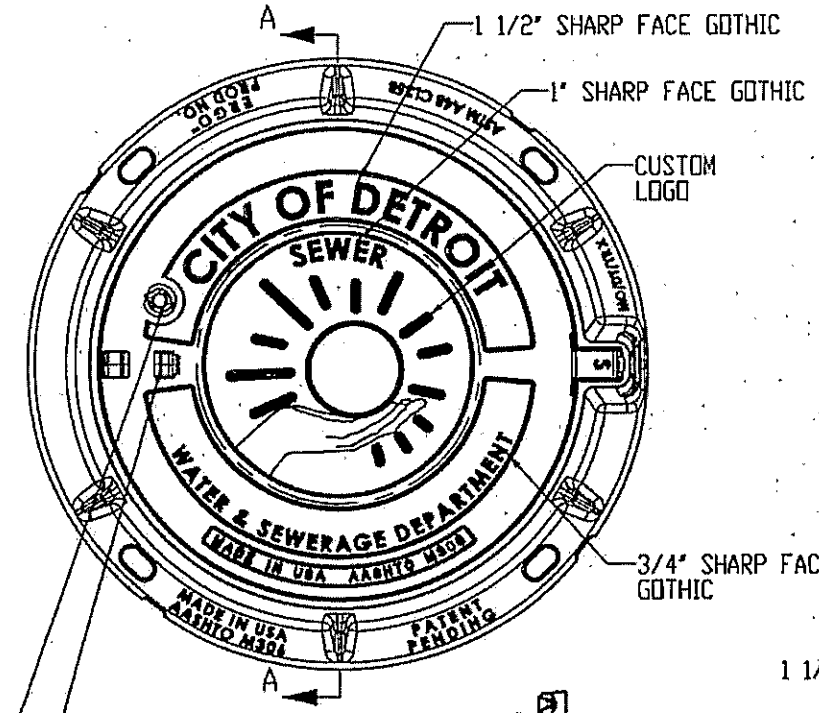

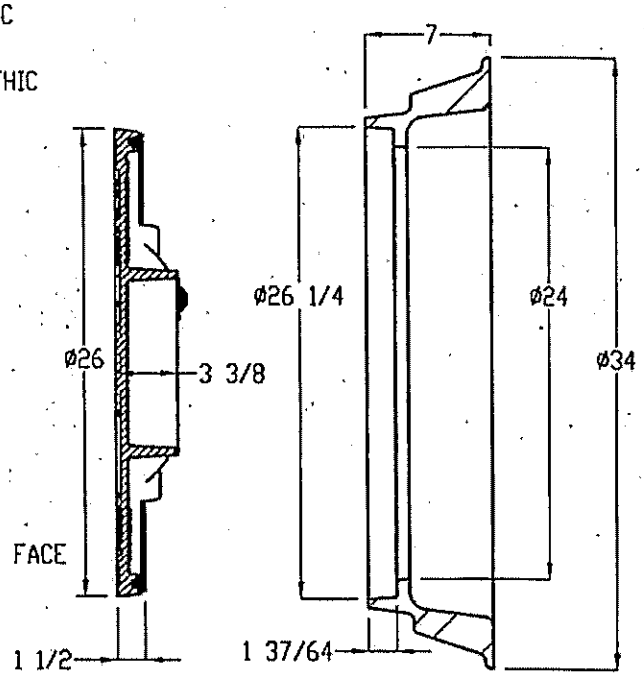

SECTION A-A

DESIGN FEATURES
-MATERIALS
COVER: DUCTILE IRON (80-55-06)
FRAME: GRAY IRON (CL35)

-DESIGN LOAD: HEAVY DUTY
-OPEN AREA: N/A
-COATING: UNDIPPED
- DESIGNATES MACHINED SURFACE

CERTIFICATION
-ASTM A536
-ASTM A48
-COUNTRY OF ORIGIN: USA

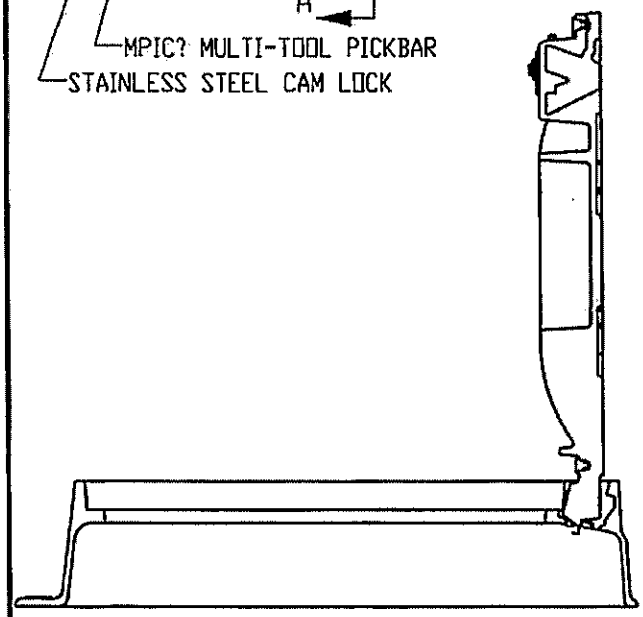

SAFETY LOCK @ 90°

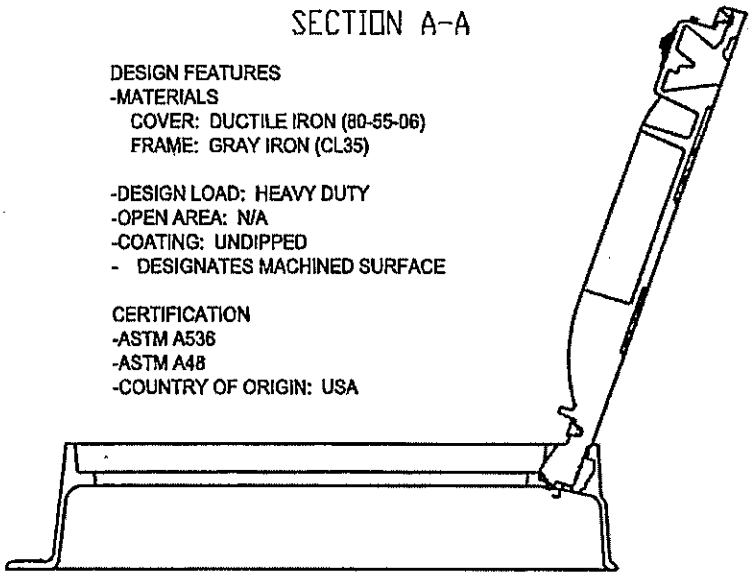

FULLY OPENED & REMOVAL POSITION @ 120°

DWSD APPROVAL: D. Single DATE: 04/16/14

Weights (lbs/kg), dimensions (inches/mm) and drawings provided for your guidance. We reserve the right to modify specifications without prior notice.

CITY OF DETROIT CITY ENGINEERING DIVISION DPW	DWSD MANHOLE ERGO ASSEMBLY	APPROVED: 4/16/14 ENGINEER OF STREETS 4/16/14 CITY ENGINEER	SHEET 1 OF 1 DETAIL STD. No. DRAWING No. 102 DRAWN BY: N.Y. SANTOS DATE: 0/15/2014

5000 Frame

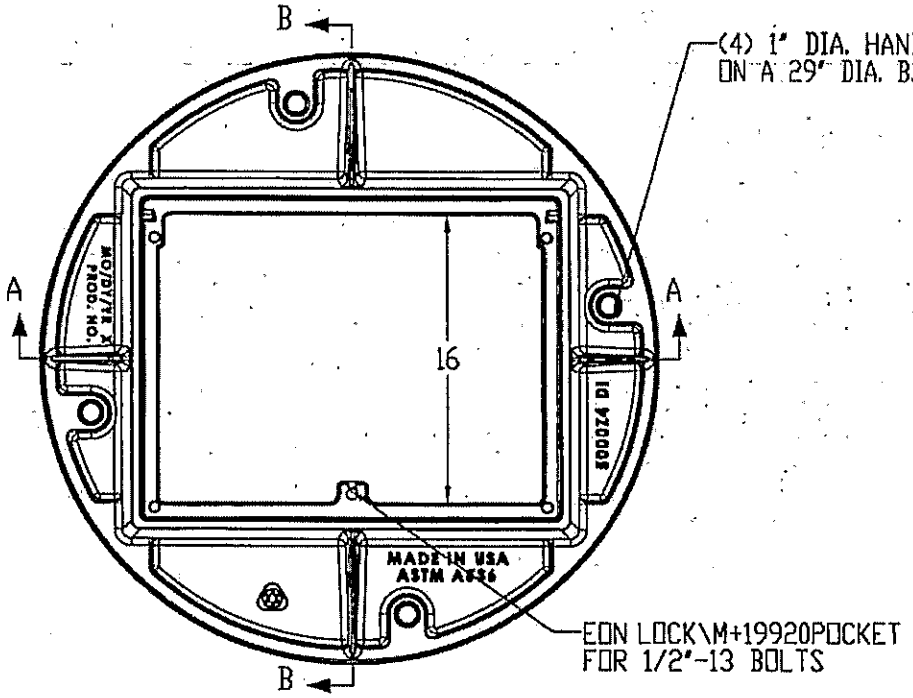

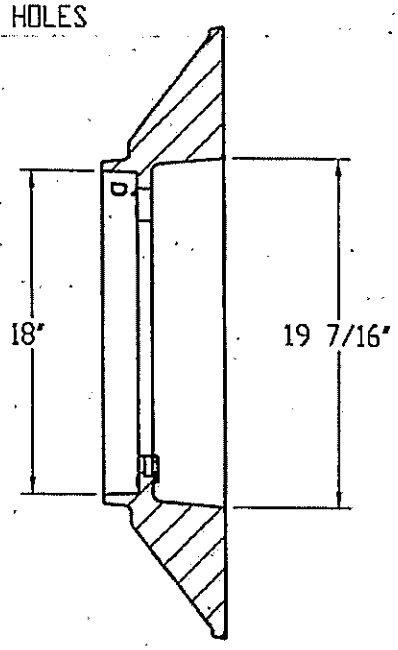

SECTION B-B

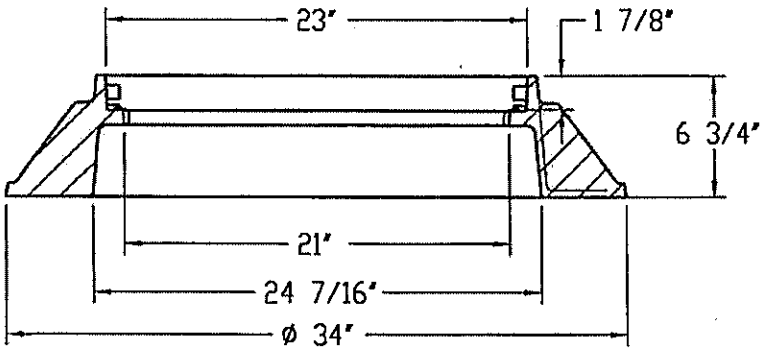

SECTION A-A

DESIGN FEATURES
-MATERIALS
FRAME: DUCTILE IRON (70-50-05)

-DESIGN LOAD: HEAVY DUTY
-COATING: UNDIPPED
-✓DESIGNATES MACHINED SURFACE

CERTIFICATION
-ASTM A536
-COUNTRY OF ORIGIN: USA

DWSD APPROVAL: D. Singel DATE: 04/16/14

CITY OF DETROIT CITY ENGINEERING DIVISION DPW	DWSD MANHOLE 5000 FRAME	APPROVED: ENGINEER OF STREETS 4/16/14 CITY ENGINEER 4/16/14	SHEET 1 OF 1 DETAIL STD. No. DRAWING No. 103 DRAWN BY: N.Y. SANTOS DATE: 0/15/2014

5000 Frame

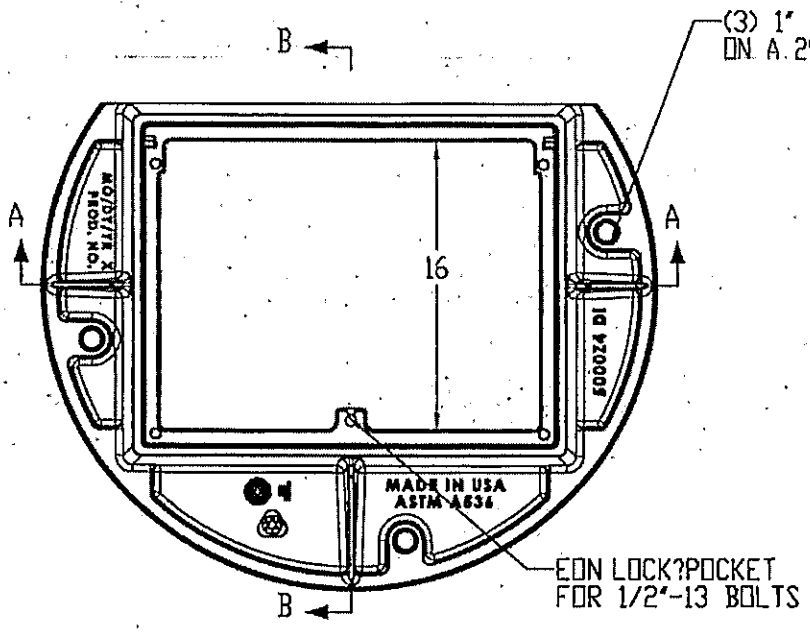

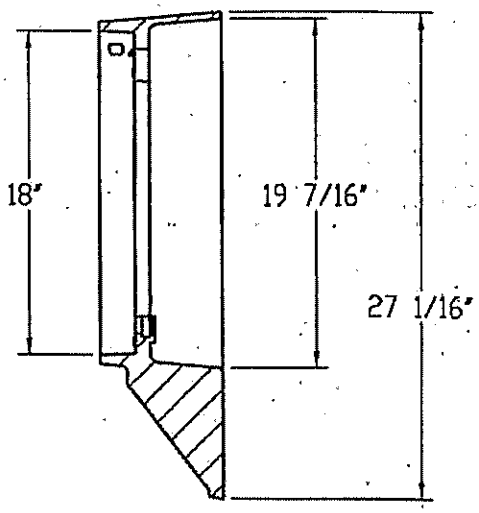

SECTION B-B

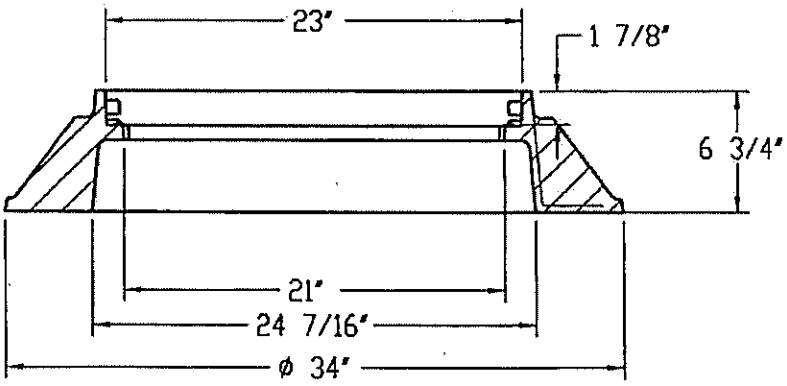

SECTION A-A

DESIGN FEATURES
-MATERIALS
FRAME: DUCTILE IRON (70-50-05)

-DESIGN LOAD: HEAVY DUTY
-COATING: UNDIPPED
-✓DESIGNATES MACHINED SURFACE

CERTIFICATION
-ASTM A536
-COUNTRY OF ORIGIN: USA

DWSD APPROVAL: D. Singh DATE: 04/16/14

CITY OF DETROIT CITY ENGINEERING DIVISION DPW	DWSD MANHOLE 5000 FRAME	APPROVED: ENGINEER OF STREETS 4/16/14 CITY ENGINEER 4/16/14	SHEET 1 OF 1 DETAIL STD. No. DRAWING No. 104 DRAWN BY: N.Y. SANTOS DATE: 9/15/2014

5000M4 Grate

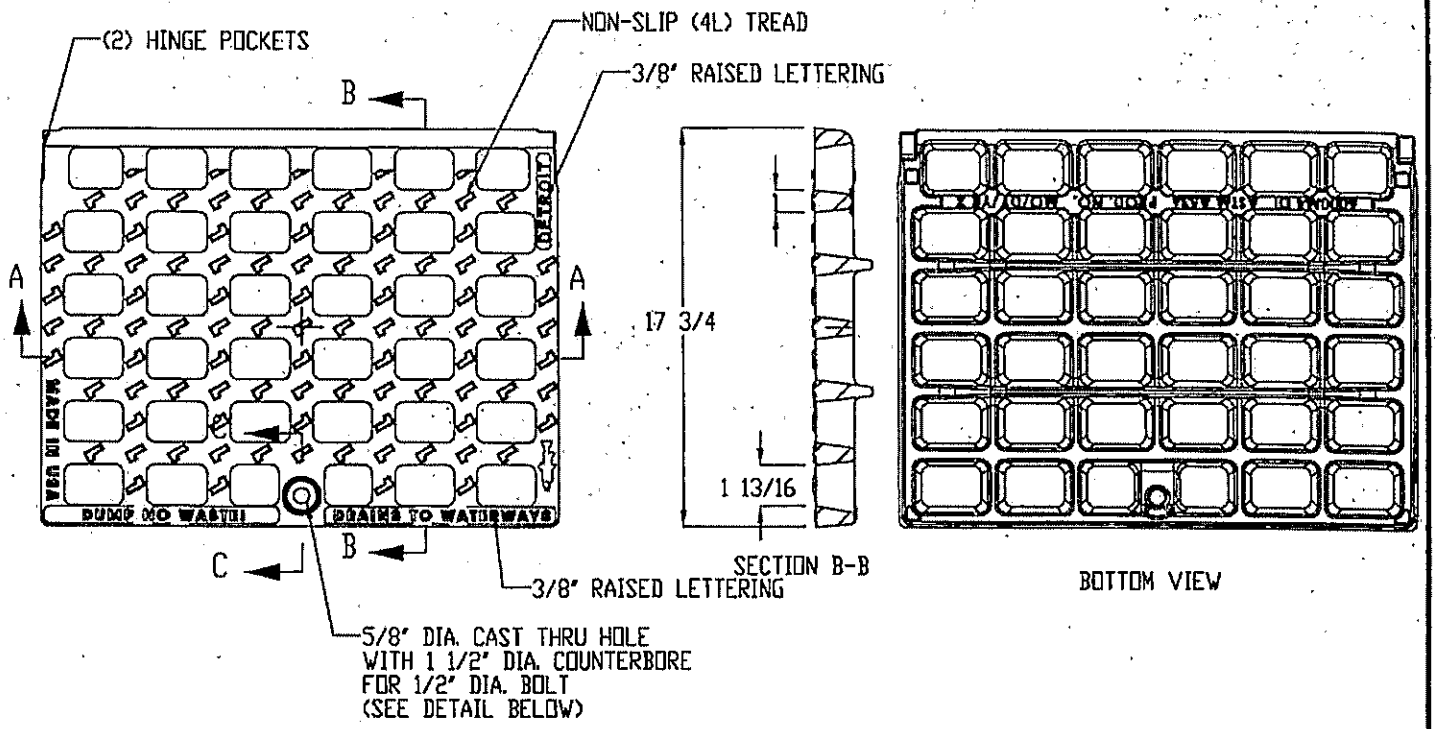

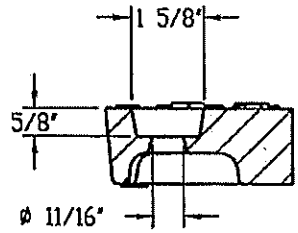

SECTION C-C

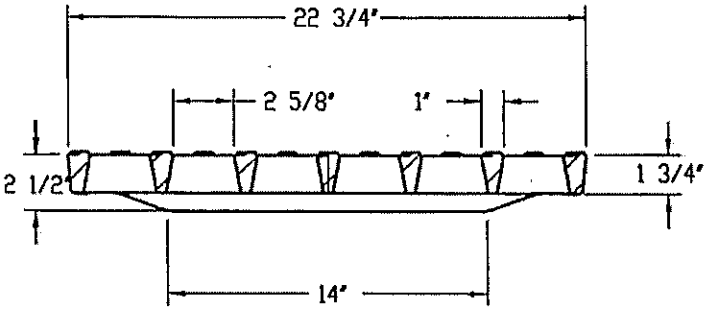

SECTION A-A

DESIGN FEATURES
-MATERIALS
COVER: DUCTILE IRON (80-55-06)

-DESIGN LOAD: HEAVY DUTY
-OPEN AREA: 160 SQ IN
-COATING: UNDIPPED
- DESIGNATES MACHINED SURFACE

CERTIFICATION
-ASTM A536
-COUNTRY OF ORIGIN: USA

DWSD APPROVAL: D. Singley DATE: 04/16/14

CITY OF DETROIT CITY ENGINEERING DIVISION DPW	CATCH BASIN 5000 M4 GRATE	APPROVED: ENGINEER OF STREETS 4/16/14 CITY ENGINEER 4/16/14	SHEET 1 OF 1 DETAIL STD. No. DRAWING No. 105 DRAWN BY: N.Y. SANTOS DATE: 0/15/2014

5000Z4 5000M4 Assembly

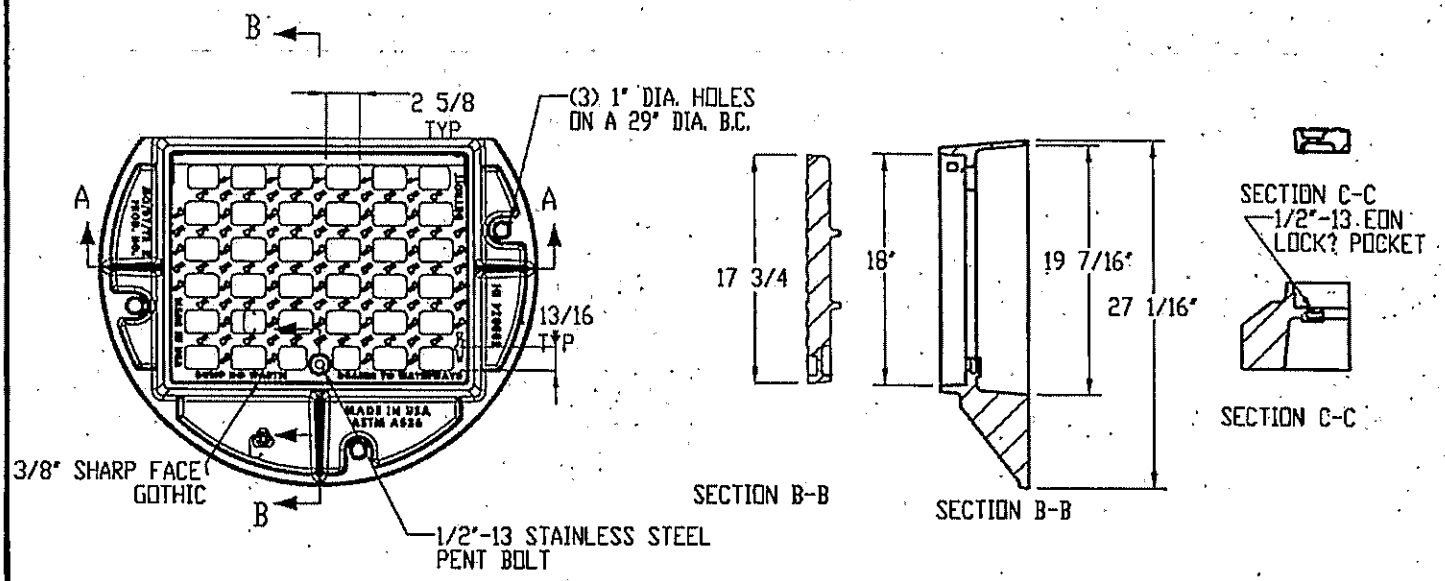

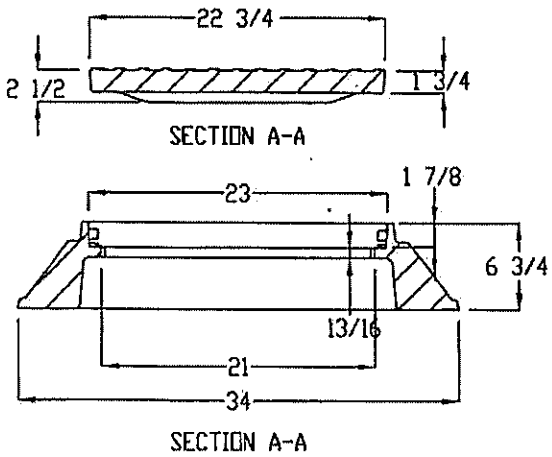

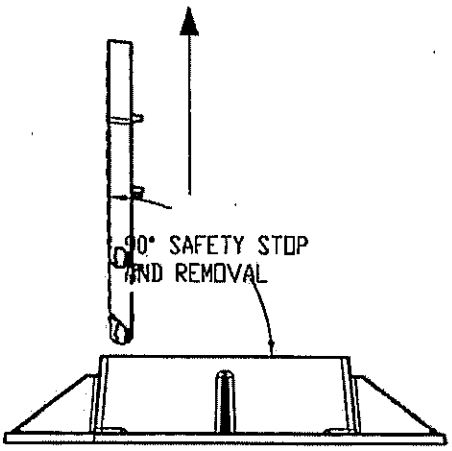

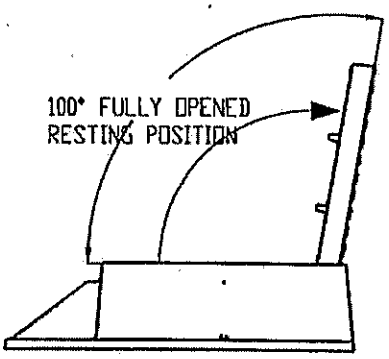

DESIGN FEATURES
-MATERIALS
COVER: DUCTILE IRON (80-55-06)
FRAME: DUCTILE IRON (70-50-05)

-DESIGN LOAD: HEAVY DUTY
-OPEN AREA: 160 SQ IN
-COATING: UNDIPPED
-✓DESIGNATES MACHINED SURFACE

CERTIFICATION
-ASTM A536
-COUNTRY OF ORIGIN: USA

DWSD APPROVAL: [signature] DATE: 04/16/14

Weights (lbs/kg), dimensions (inches/mm) and drawings provided for your guidance. We reserve the right to modify specifications without prior notice.

CITY OF DETROIT CITY ENGINEERING DIVISION DPW	CATCH BASIN 5000Z4 5000M4 ASSEMBLY	APPROVED: [signature] 4/16/14 ENGINEER OF STREETS [signature] 4/16/14 CITY ENGINEER	SHEET 1 OF 1 DETAIL STD. No. DRAWING No. 106 DRAWN BY: N.Y. SANTOS DATE: 9/15/2014

5000 Assembly

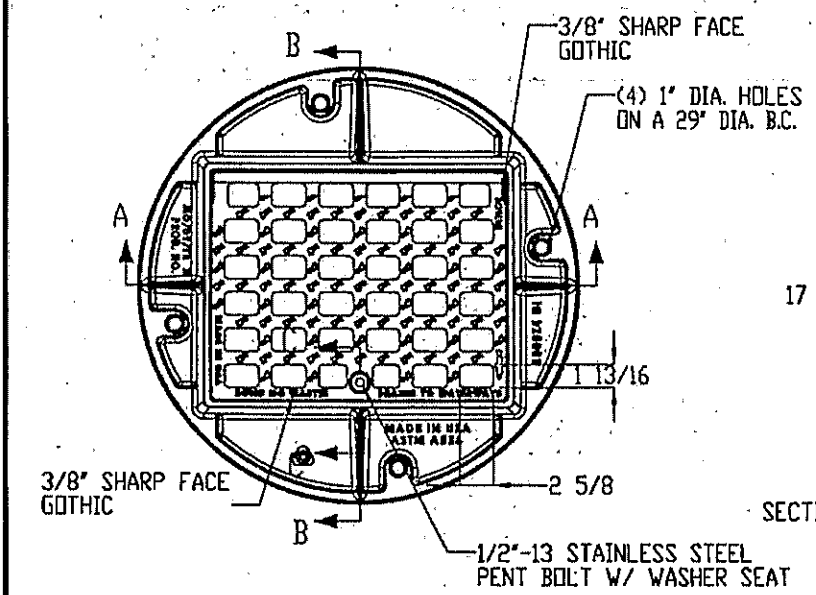

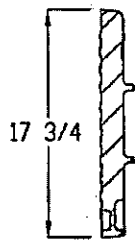

SECTION B-B

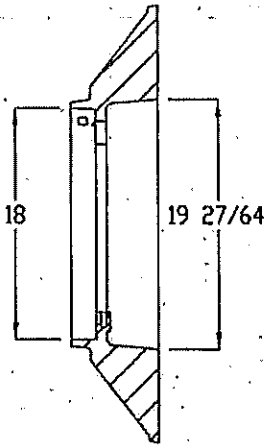

SECTION B-B

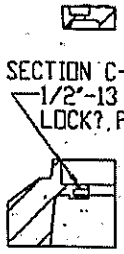

SECTION C-C

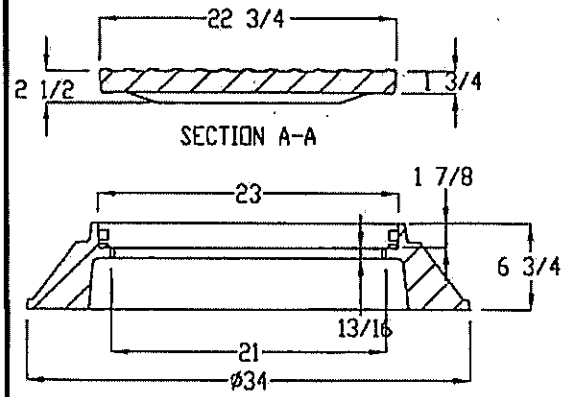

SECTION A-A

SECTION A-A

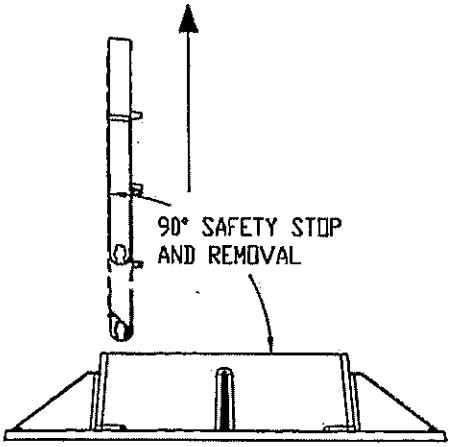

SAFETY STOP AND REMOVAL POSITION

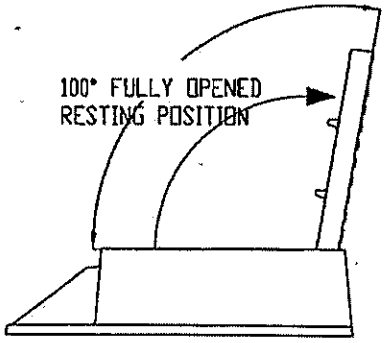

FULLY OPEN POSITION

DESIGN FEATURES
-MATERIALS
COVER: DUCTILE IRON (80-55-06)
FRAME: DUCTILE IRON (70-50-05)

-DESIGN LOAD: HEAVY DUTY
-OPEN AREA: 160 SQ IN
-COATING: UNDIPPED
-✓DESIGNATES MACHINED SURFACE

CERTIFICATION
-ASTM A536
-COUNTRY OF ORIGIN: USA

DWSD APPROVAL: D. Singh DATE: 04/16/14

CITY OF DETROIT CITY ENGINEERING DIVISION DPW	CATCH BASIN 5000 ASSEMBLY	APPROVED: ENGINEER OF STREETS 4/16/14 CITY ENGINEER 4/16/14	SHEET 1 OF 1 DETAIL STD. No. DRAWING No. 107 DRAWN BY: N.Y. SANTOS DATE: 0/15/2014

5000M5 Grate

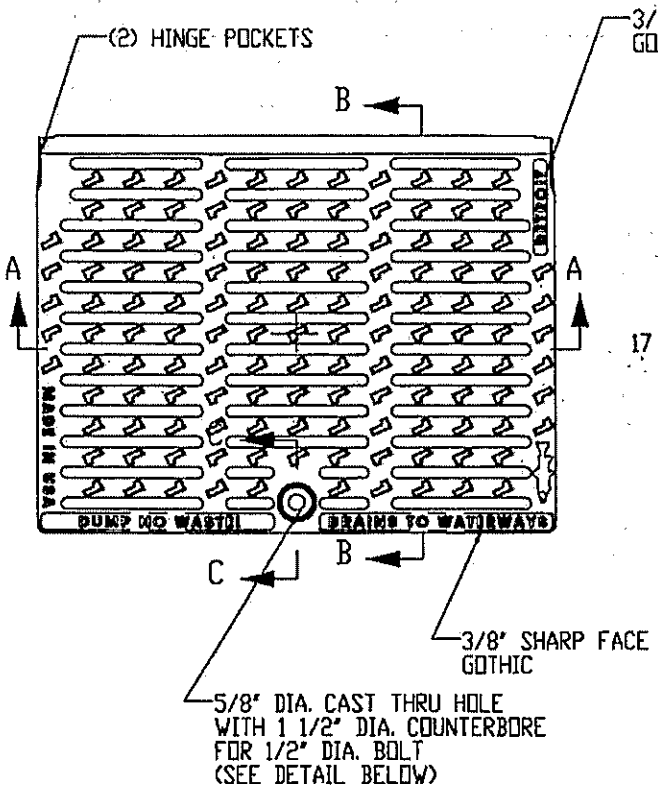

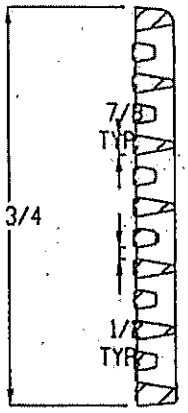

SECTION B-B

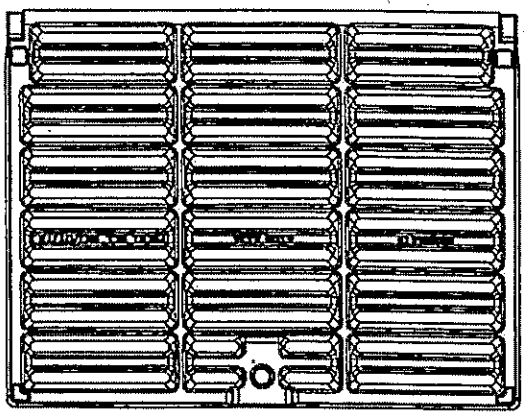

BOTTOM VIEW

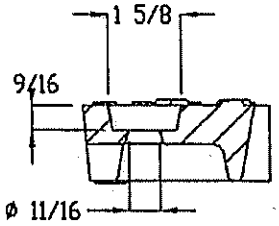

SECTION C-C

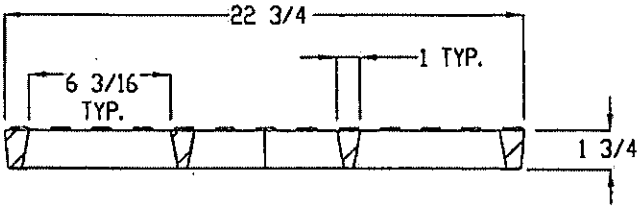

SECTION A-A

DESIGN FEATURES
-MATERIALS
COVER: DUCTILE IRON (80-55-06)

-DESIGN LOAD: HEAVY DUTY
-COATING: UNDIPPED
- DESIGNATES MACHINED SURFACE

CERTIFICATION
-ASTM A536
-COUNTRY OF ORIGIN: USA

DWSD APPROVAL: D. Singh DATE: 04/16/14

CITY OF DETROIT CITY ENGINEERING DIVISION DPW	A.D.A. CATCH BASIN 5000M5 GRATE	APPROVED: approved 4/16/14 ENGINEER OF STREETS 4/16/14 CITY ENGINEER	SHEET 1 OF 1 DETAIL STD. No. DRAWING No. 108 DRAWN BY: N.Y. SANTOS DATE: 0/15/2014

5000Z4 5000M5 Assembly

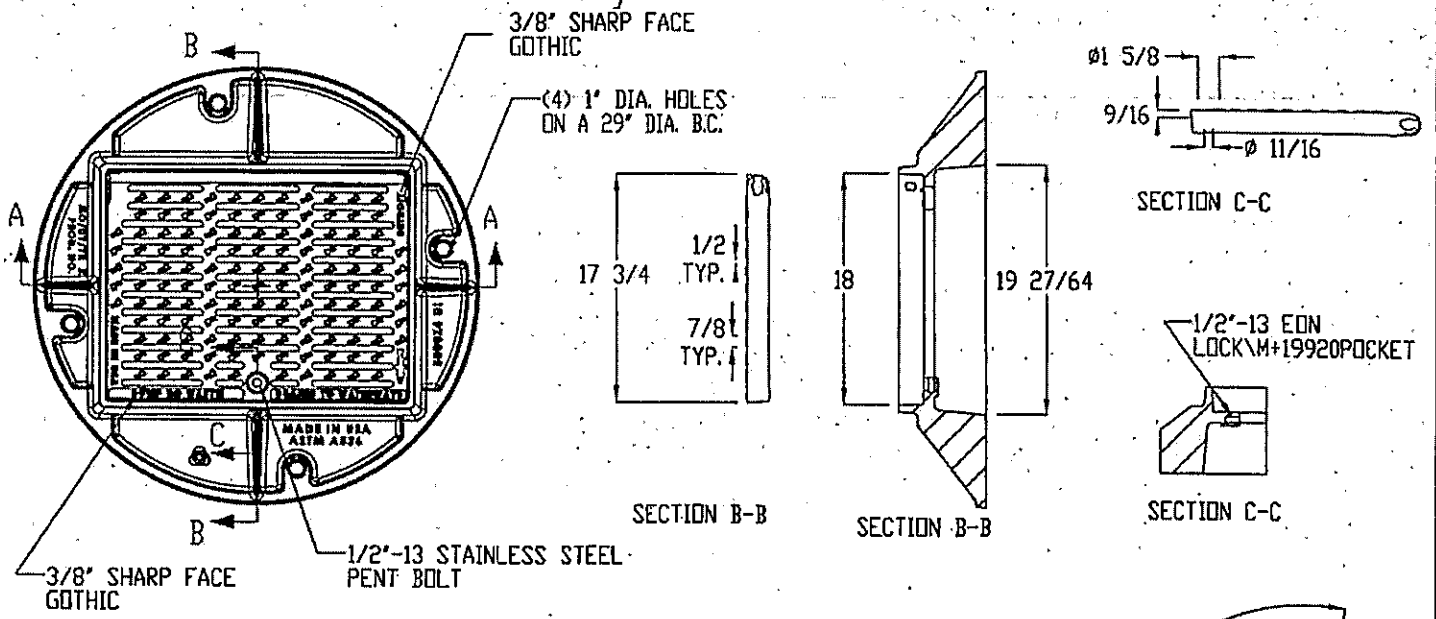

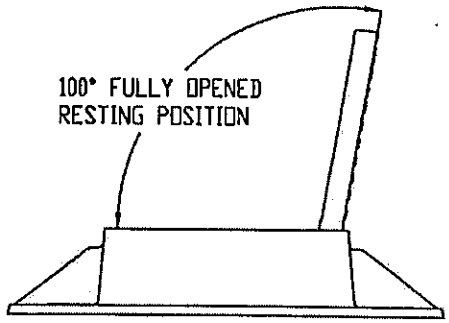

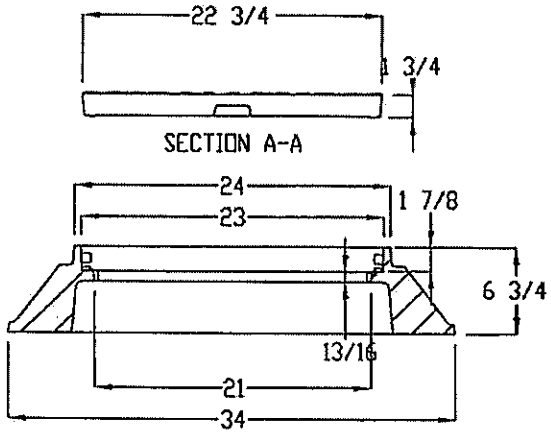

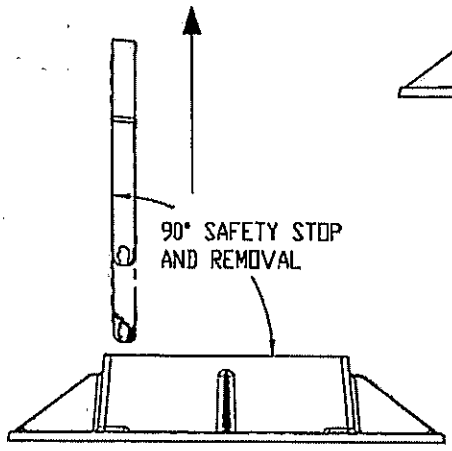

DESIGN FEATURES
-MATERIALS
COVER: DUCTILE IRON (80-55-06)
FRAME: DUCTILE IRON (70-50-05)

-DESIGN LOAD: HEAVY DUTY
-OPEN AREA: 110 SQ IN
-COATING: UNDIPPED
-✓DESIGNATES MACHINED SURFACE

CERTIFICATION
-ASTM A536
-COUNTRY OF ORIGIN: USA

Weights (lbs/kg), dimensions (inches/mm) and drawings provided for your guidance. We reserve the right to modify specifications without prior notice.

DWSD APPROVAL: R. Singlet DATE: 04/16/14

CITY OF DETROIT CITY ENGINEERING DIVISION DPW	A.D.A. CATCH BASIN 5000Z4 5000M5 ASSEMBLY	APPROVED: 4/16/14 ENGINEER OF STREETS 4/16/14 CITY ENGINEER	SHEET 1 OF 1 DETAIL STD. No. DRAWING No. 109 DRAWN BY: N.Y. SANTOS DATE: 0/15/2014

5000Z4 5000M5 Assembly

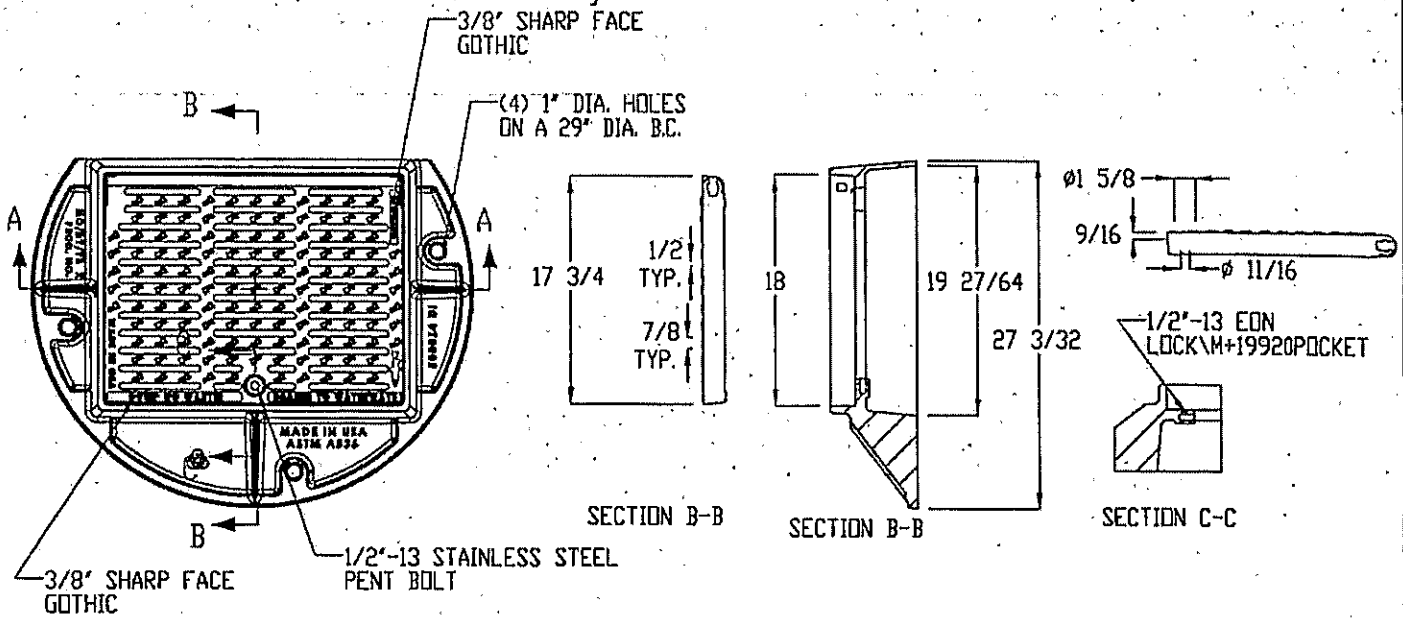

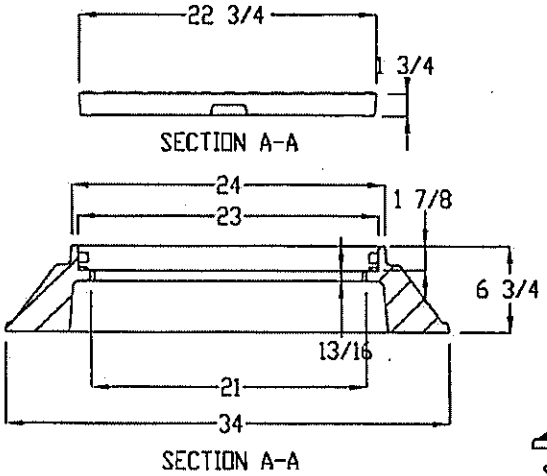

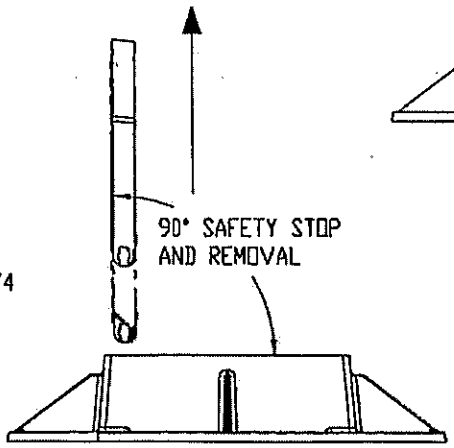

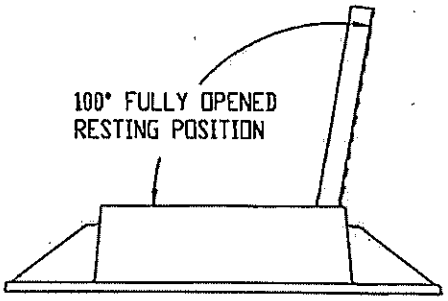

DESIGN FEATURES
-MATERIALS
COVER: DUCTILE IRON (80-55-06)
FRAME: DUCTILE IRON (70-50-05)

-DESIGN LOAD: HEAVY DUTY
-OPEN AREA: 110 SQ IN
-COATING: UNDIPPED
-✓DESIGNATES MACHINED SURFACE

CERTIFICATION
-ASTM A536
-COUNTRY OF ORIGIN: USA

DWSD APPROVAL: A. Single DATE: 04/16/14

CITY OF DETROIT CITY ENGINEERING DIVISION DPW	A.D.A. CATCH BASIN 5000Z4 5000M5 ASSEMBLY	APPROVED: ENGINEER OF STREETS 4/16/14 CITY ENGINEER 4/16/14	SHEET 1 OF 1 DETAIL STD. No. DRAWING No. 110 DRAWN BY: N.Y. SANTOS DATE 0/15/2014

ERGO Cover

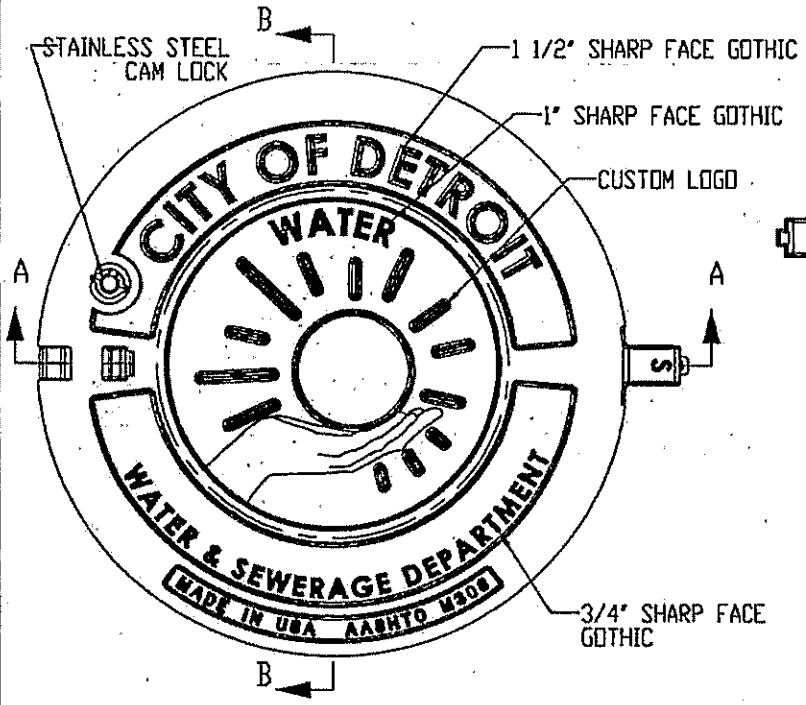

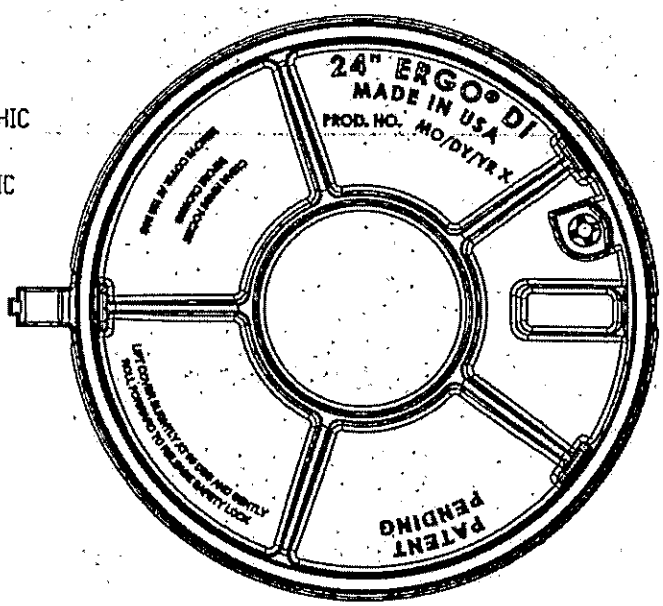

BOTTOM VIEW

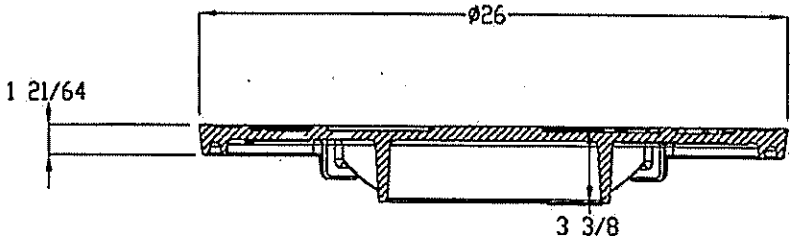

SECTION B-B

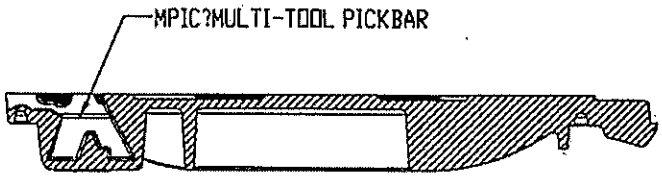

SECTION A-A

DESIGN FEATURES
-MATERIALS
COVER: DUCTILE IRON (80-55-06)

-DESIGN LOAD: HEAVY DUTY
-OPEN AREA: N/A
-COATING: UNDIPPED
-✓DESIGNATES MACHINED SURFACE

CERTIFICATION
-ASTM A536
-COUNTRY OF ORIGIN: USA

DWSD APPROVAL: D. Singh DATE: 04/16/14

CITY OF DETROIT CITY ENGINEERING DIVISION DPW	DWSD MANHOLE ERGO COVER	APPROVED: upated 4/16/14 ENGINEER OF STREETS 4/16/14 CITY ENGINEER	SHEET 1 OF 1 DETAIL STD. No. DRAWING No. 111 DRAWN BY: N.Y. SANTOS DATE: 0/15/2014

ERGO Cover

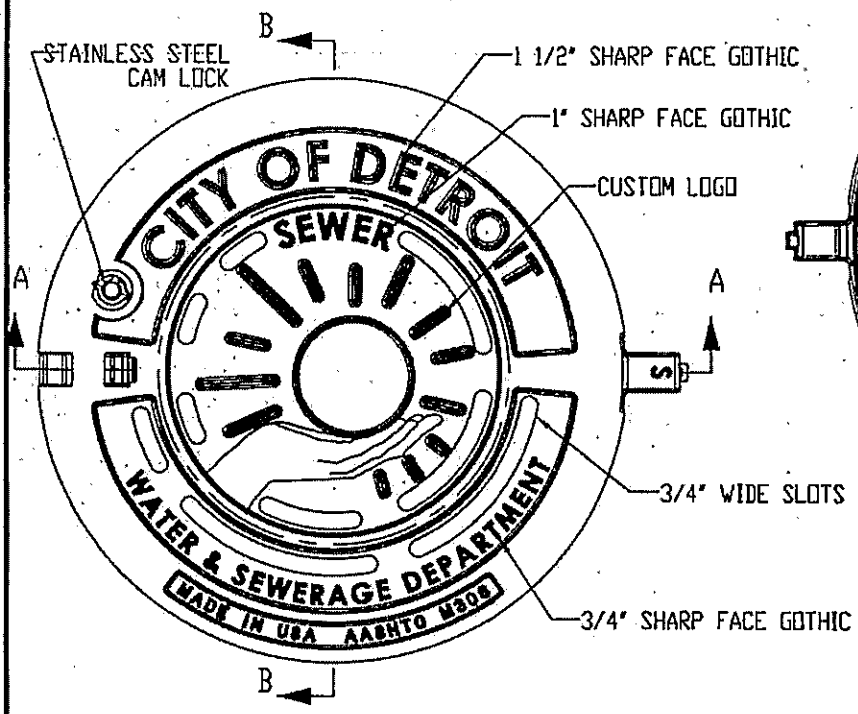

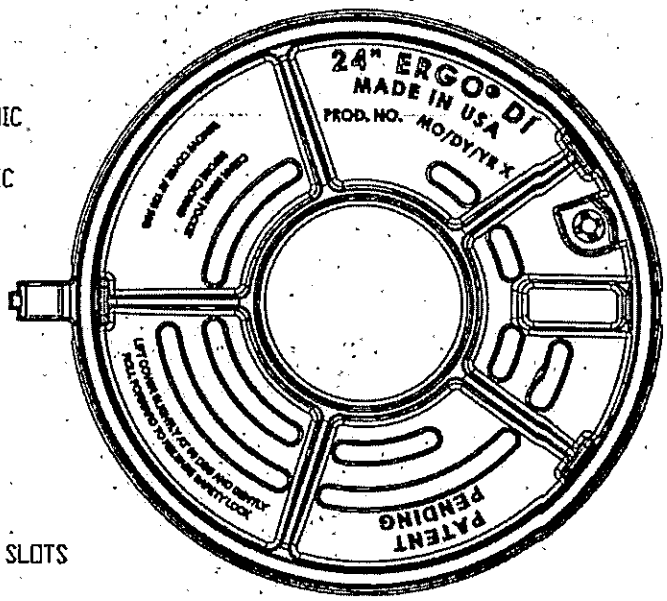

BOTTOM VIEW

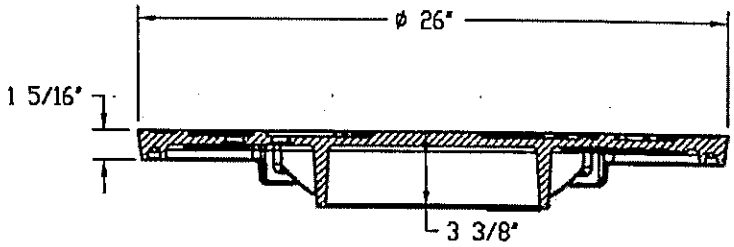

SECTION B-B

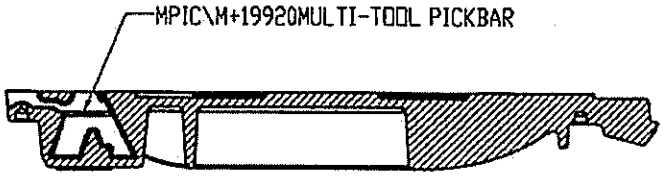

SECTION A-A

DESIGN FEATURES
-MATERIALS
COVER: DUCTILE IRON (80-55-06)

-DESIGN LOAD: HEAVY DUTY
-OPEN AREA: N/A
-COATING: UNDIPPED
- DESIGNATES MACHINED SURFACE

CERTIFICATION
-ASTM A536
-COUNTRY OF ORIGIN: USA

DWSD APPROVAL: A. Singh DATE: 04/16/14

CITY OF DETROIT CITY ENGINEERING DIVISION DPW	DWSD MANHOLE ERGO COVER	APPROVED: ENGINEER OF STREETS 4/16/14 CITY ENGINEER 4/16/14	SHEET 1 OF 1 DETAIL STD. No. DRAWING No. 112 DRAWN BY: N.Y. SANTOS DATE: 9/15/2014

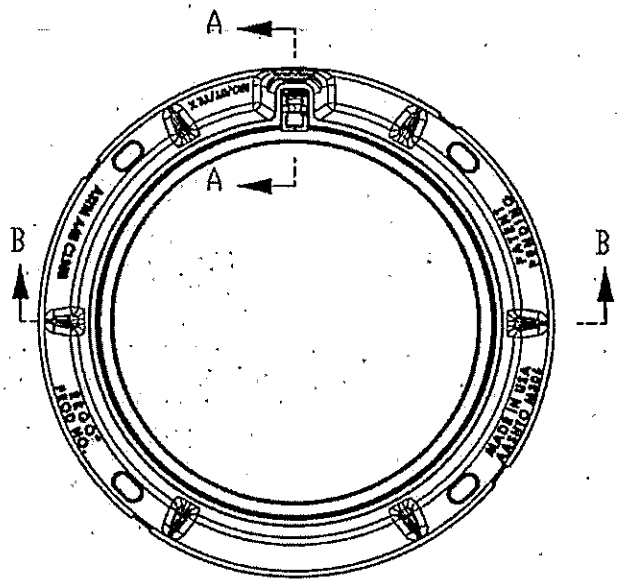

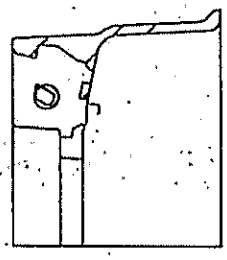

SECTION A-A
SCALE 1 : 6

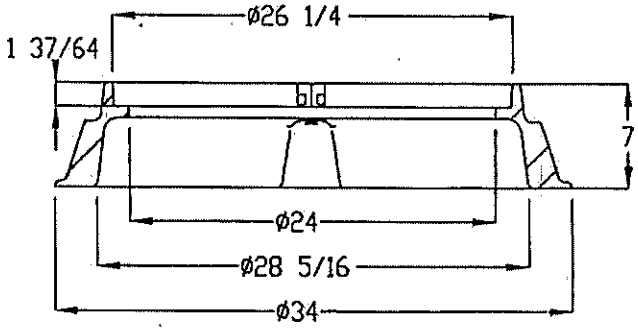

SECTION B-B

DESIGN FEATURES
-MATERIALS
FRAME: DUCTILE IRON (70-50-05)

-DESIGN LOAD: HEAVY DUTY
-OPEN AREA: N/A
-COATING: UNDIPPED
-✓DESIGNATES MACHINED SURFACE

CERTIFICATION
-ASTM A536
-COUNTRY OF ORIGIN: USA

DWSD APPROVAL: R. Singh DATE: 04/16/14

CITY OF DETROIT CITY ENGINEERING DIVISION DPW	DWSD MANHOLE FRAME	APPROVED: Updated 4/16/14 ENGINEER OF STREETS 4/16/14 CITY ENGINEER	SHEET 1 OF 1 DETAIL STD. No. DRAWING No. 113 DRAWN BY: N.Y. SANTOS DATE: 0/15/2014

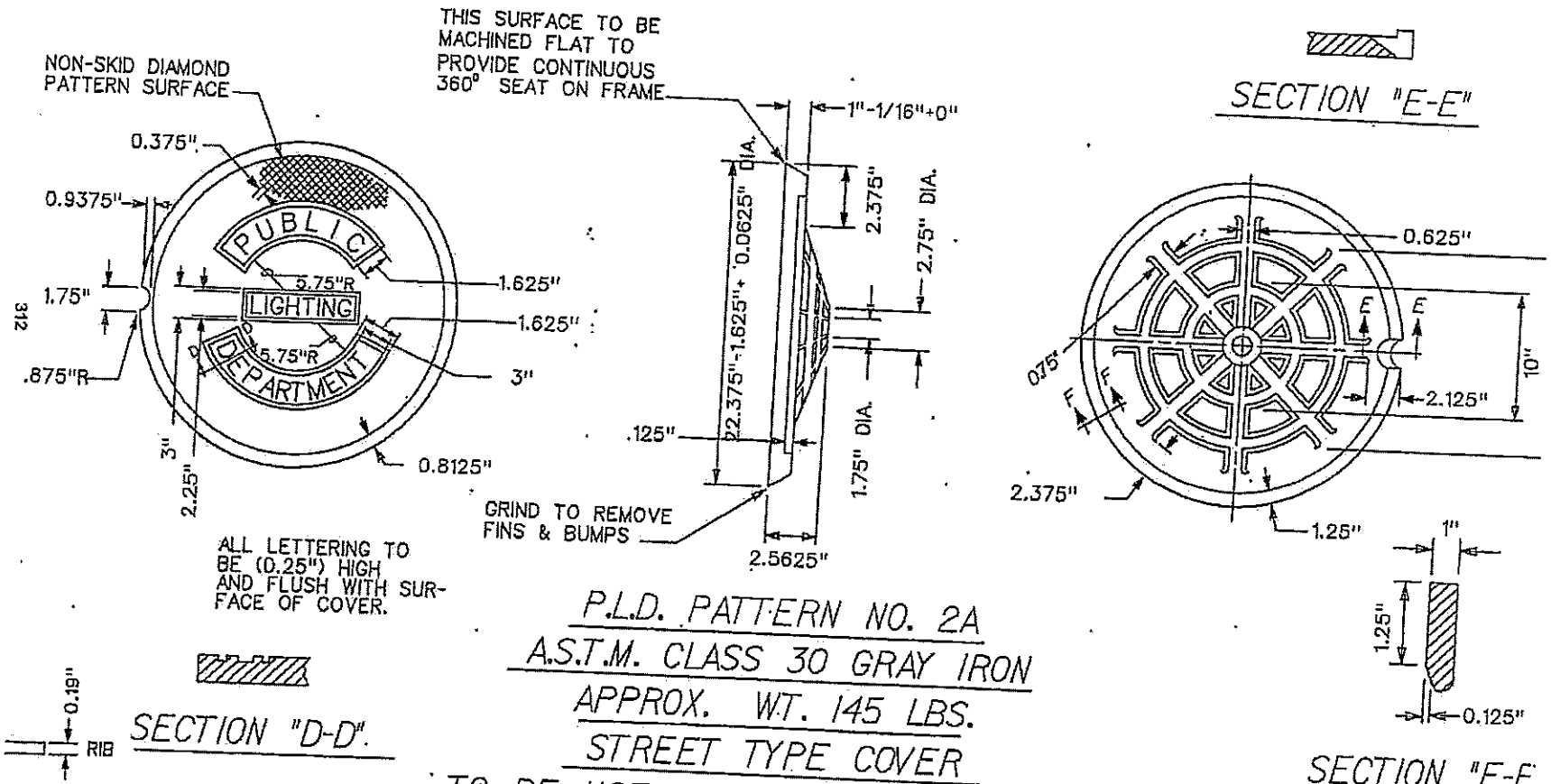

P.L.D. PATTERN NO. 2A

A.S.T.M. CLASS 30 GRAY IRON

APPROX. WT. 145 LBS.

STREET TYPE COVER

TO BE USED IN STREETS & DRIVES

INTERSECTIONS

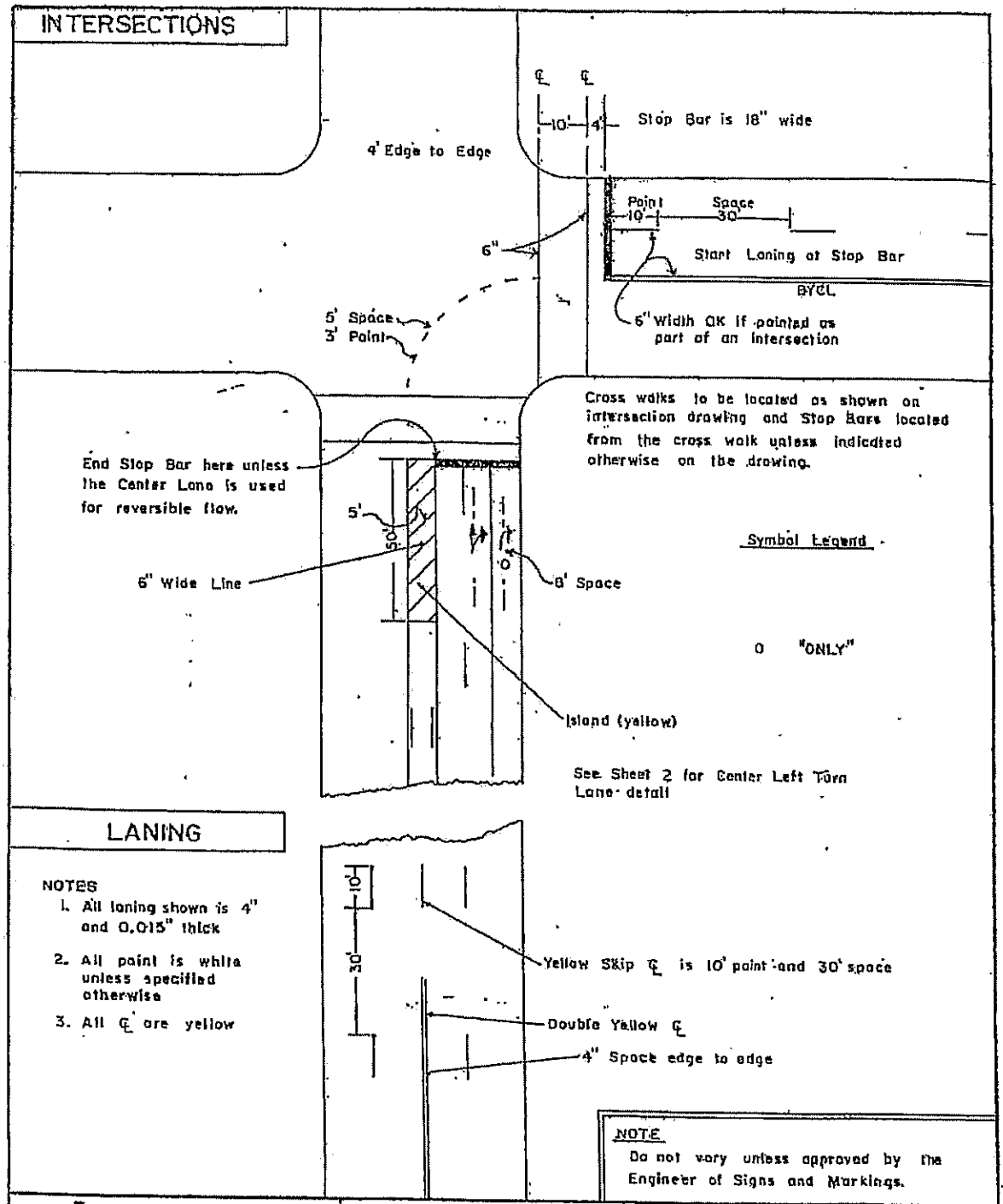

LANING

NOTES

1. All laning shown is 4" and 0.015" thick
2. All paint is white unless specified otherwise
3. All ℄ are yellow

NOTE

Do not vary unless approved by the Engineer of Signs and Markings.

CITY OF DETROIT
DEPARTMENT OF TRANSPORTATION
PLANNING & TRAFFIC ENGINEERING

FIELD MARKING STANDARDS

1 of 4

DRAWN A. L. Walker
SCALE None
DATE March 30, 1978

NO. SG-50

CENTER LEFT TURN LANE CROSSOVER DETAILS

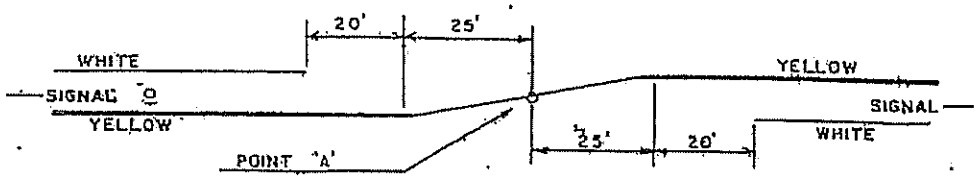

BETWEEN TWO SIGNALIZED INTERSECTIONS

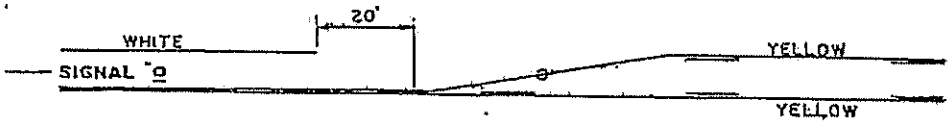

BETWEEN SIGNALIZED AND NON-SIGNALIZED INTERSECTIONS

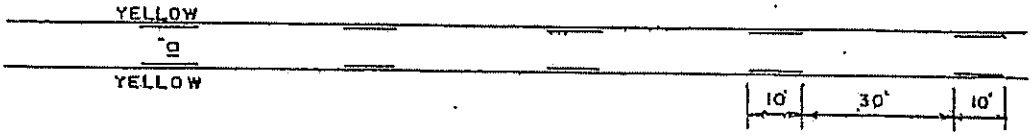

BETWEEN TWO NON-SIGNALIZED INTERSECTIONS

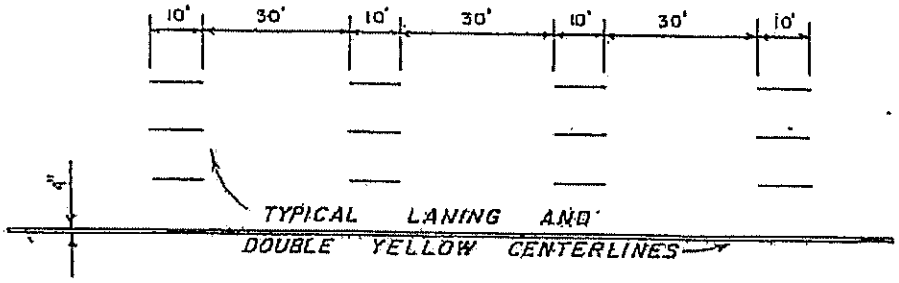

Note:
Point 'A' is located mid-block unless otherwise noted.
All lane lines and centerlines begin or end at inter-sectional stop bars unless otherwise noted.

CITY OF DETROIT DEPARTMENT OF TRANSPORTATION PLANNING & TRAFFIC ENGINEERING	FIELD MARKING STANDARDS 2 of 4	DRAWN A.L. Walker SCALE 1" = 30' DATE March 27, 1978 NO. SG-50

LEFT TURN & REVERSIBLE CENTER LANE DETAILS

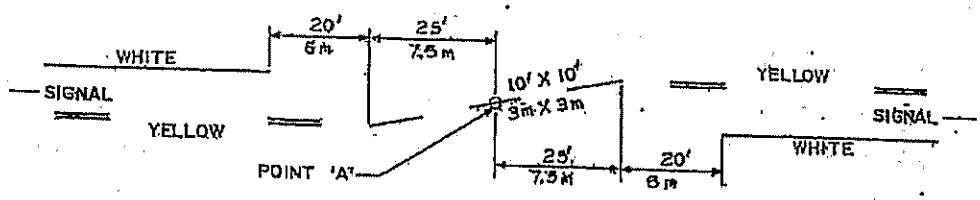

BETWEEN TWO SIGNALIZED INTERSECTIONS

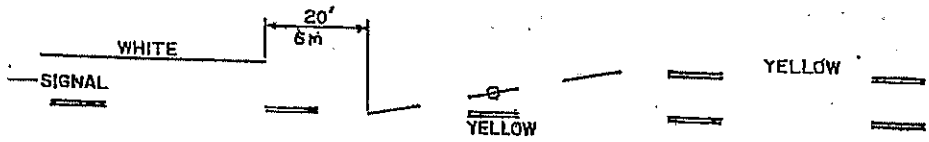

BETWEEN SIGNALIZED AND NON-SIGNALIZED INTERSECTIONS

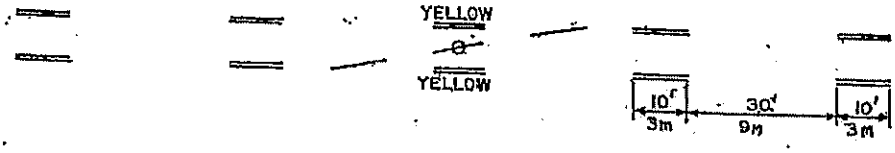

BETWEEN TWO NON-SIGNALIZED INTERSECTIONS

REVISED 1-24-97 AB

METRIC SCALE 25mm = 9m

CITY OF DETROIT
DEPARTMENT OF TRANSPORTATION
Transportation Engineering

FIELD MARKING STANDARDS

3 of 4

DRAWN Dennis R. Ellis
SCALE 1" = 30'
DATE 8 June 81

NO: SG-50

TELEDYNE FOR N73952

SYMBOLS

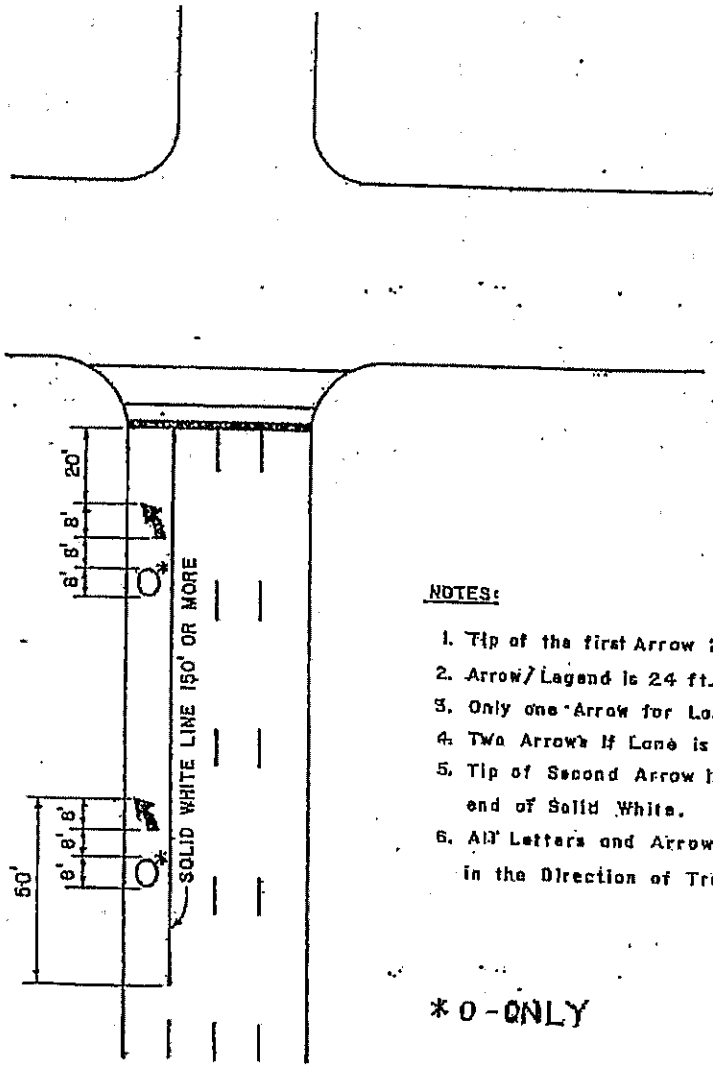

NOTES:

1. Tip of the first Arrow 20 ft. from Stop Bar.
2. Arrow/Legend is 24 ft. long.
3. Only one Arrow for Lanes less than 150 ft.
4. Two Arrows if Lane is 150 ft. or more.
5. Tip of Second Arrow is located 50 ft. from end of Solid White.
6. All Letters and Arrows are White and read in the Direction of Travel.

* 0 - ONLY

DRAWING 75677 FORM # 1250

CITY OF DETROIT
DEPARTMENT OF TRANSPORTATION
Transportation Engineering

FIELD MARKING STANDARDS

4 of 4

DRAWN E. W. Paluch
SCALE 1" = 40'
DATE Sept. 27, 1991

NO. SG-50

* MAXIMUM TURNING SPACE SLOPE IS 2.0% IN EACH DIRECTION OF TRAVEL. MINIMUM DIMENSIONS 5' x 5'. SEE NOTES.

** MAXIMUM RAMP CROSS SLOPE IS 2.0%. RUNNING SLOPE 5% - 7% (8.3% MAXIMUM). SEE NOTES.

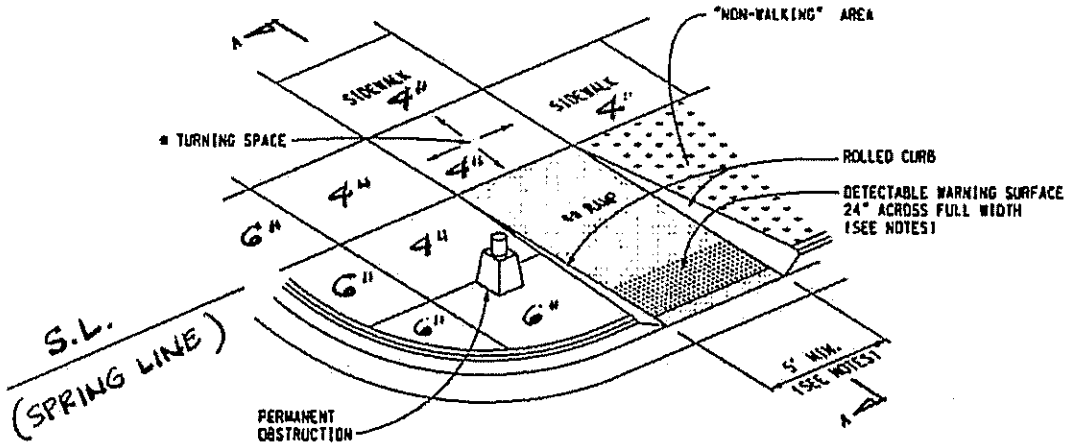

SIDEWALK RAMP TYPE R

(ROLLED SIDES)

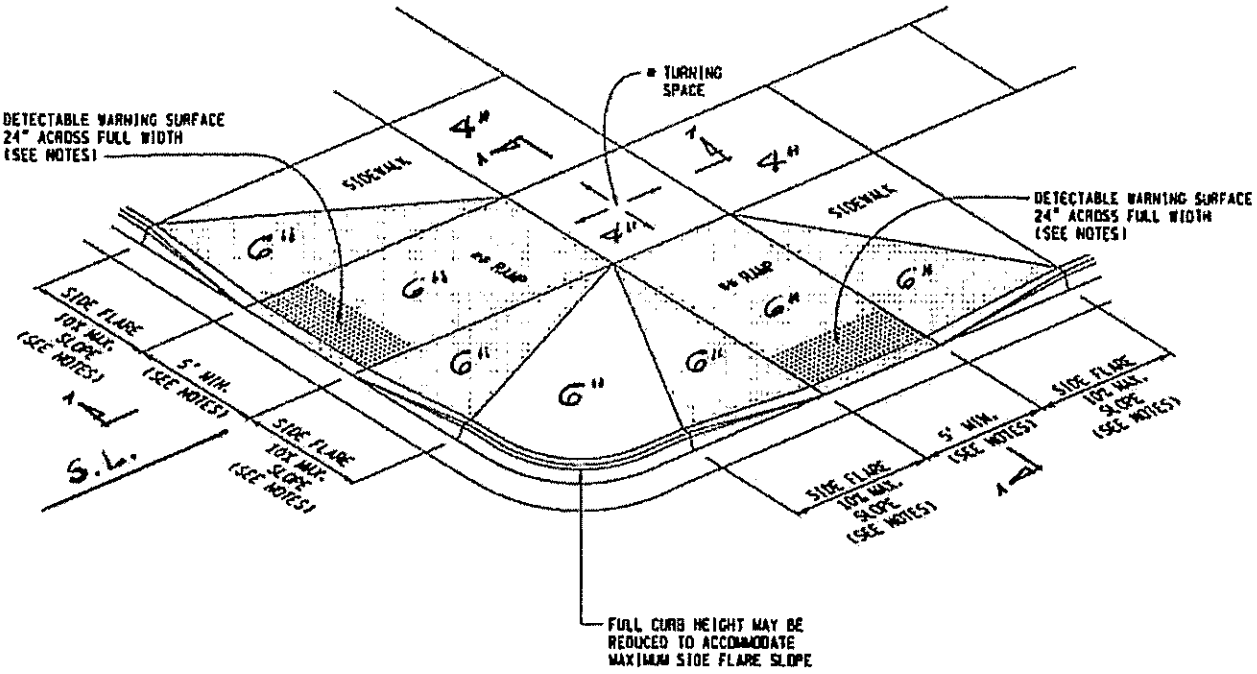

SIDEWALK RAMP TYPE F

(FLARED SIDES, TWO RAMPS SHOWN)

MDOT Michigan Department of Transportation PREPARED BY DESIGN DIVISION DRAWN BY: B.L.T. CHECKED BY: W.K.P.	DEPARTMENT DIRECTOR Kirk T. Steudle APPROVED BY: [signature] DIRECTOR, BUREAU OF FIELD SERVICES APPROVED BY: [signature] DIRECTOR, BUREAU OF HIGHWAY DEVELOPMENT	MICHIGAN DEPARTMENT OF TRANSPORTATION BUREAU OF HIGHWAY DEVELOPMENT STANDARD PLAN FOR SIDEWALK RAMP AND DETECTABLE WARNING DETAILS 9-30-2014 F.H.W.A. APPROVAL | 7-1-2014 PLAN DATE | R-28-I | SHEET 1 OF 7

* MAXIMUM TURNING SPACE SLOPE IS 2.0% IN EACH DIRECTION OF TRAVEL. MINIMUM DIMENSIONS 5' x 5'. SEE NOTES.

** MAXIMUM RAMP CROSS SLOPE IS 2.0%. RUNNING SLOPE 5% - 7% (8.3% MAXIMUM). SEE NOTES.

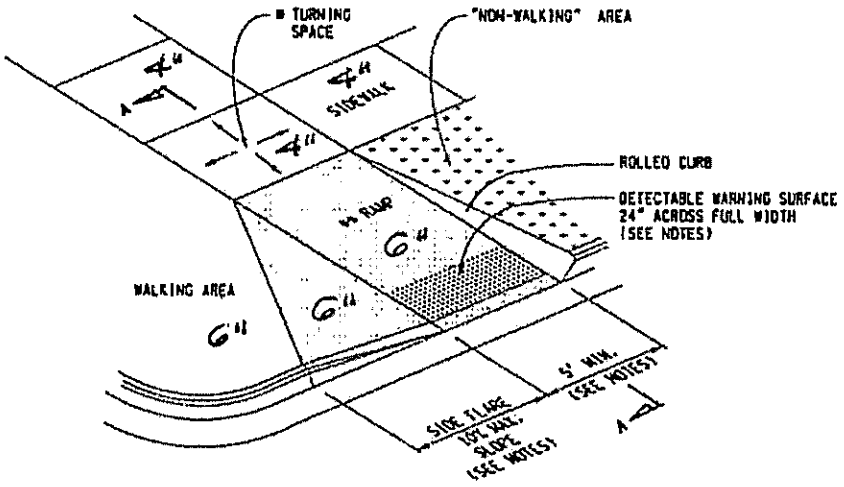

SIDEWALK RAMP TYPE RF

(ROLLED / FLARED SIDES)

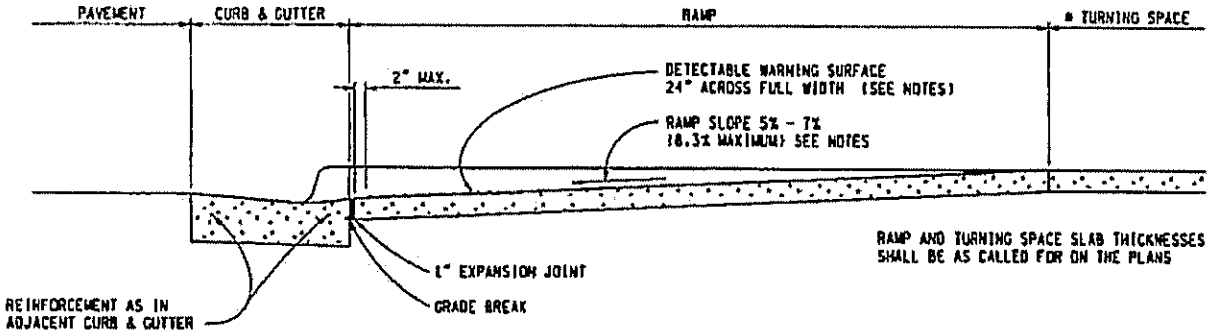

SECTION A-A

*** TRANSITION ADJACENT GUTTER PAN CROSS SECTION TO PROVIDE 5.0% MAXIMUM COUNTER SLOPE ACROSS THE RAMP OPENING.

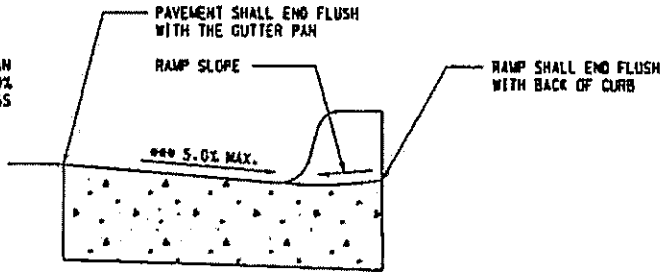

SECTION THROUGH CURB CUT

(TYPICAL ALL RAMP TYPES)

MICHIGAN DEPARTMENT OF TRANSPORTATION
BUREAU OF HIGHWAY DEVELOPMENT STANDARD PLAN FOR

SIDEWALK RAMP AND DETECTABLE WARNING DETAILS

9-30-2014 F.H.W.A. APPROVAL	7-1-2014 PLAN DATE	R-28-I	SHEET 2 OF 7

* MAXIMUM TURNING SPACE SLOPE IS 2.0% IN EACH DIRECTION OF TRAVEL. MINIMUM DIMENSIONS 5' x 5'. SEE NOTES.

** MAXIMUM RAMP CROSS SLOPE IS 2.0%. RUNNING SLOPE 5% - 7% (8.3% MAXIMUM). SEE NOTES.

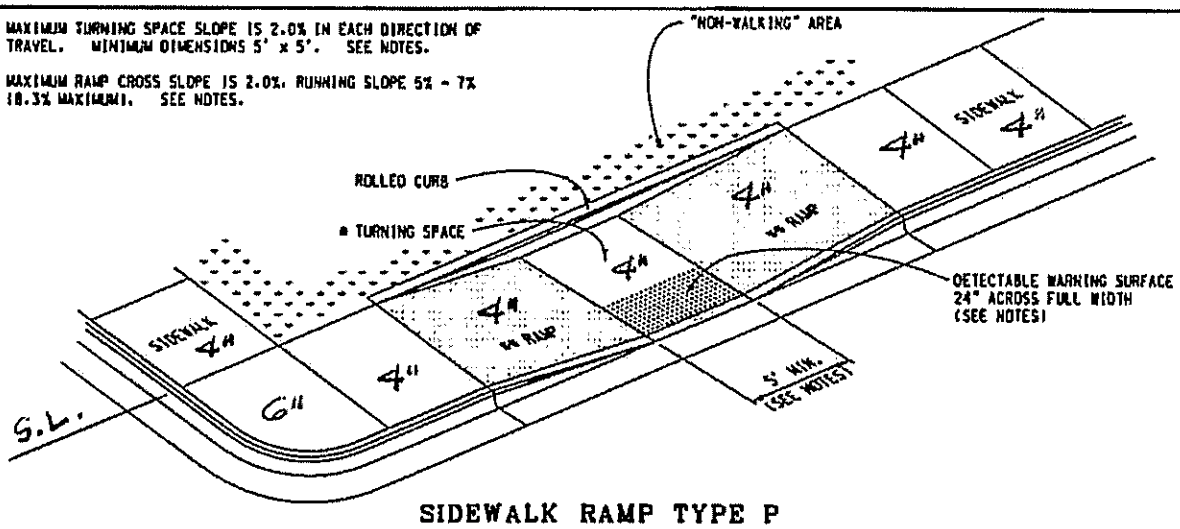

SIDEWALK RAMP TYPE P

(PARALLEL RAMP)

DO NOT USE IN AREAS WHERE PONDING MAY OCCUR

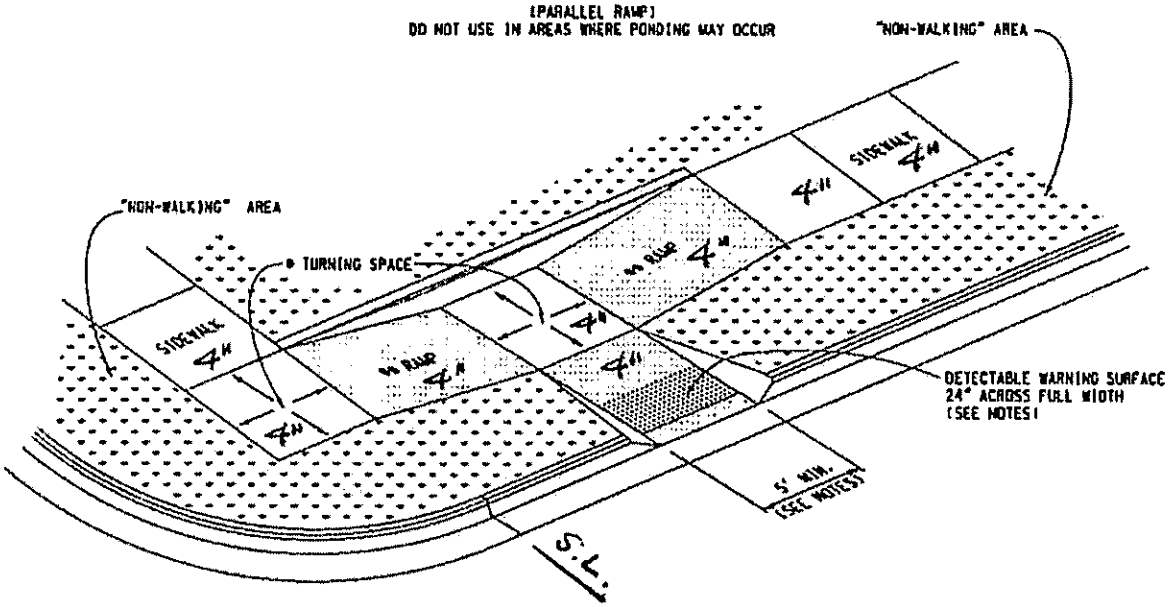

SIDEWALK RAMP TYPE C

(COMBINATION RAMP)

USE 24" DEEP DETECTABLE WARNINGS IF MEDIAN WIDTH IS AT LEAST 6'-0". OTHERWISE NO DETECTABLE WARNING IS REQUIRED.

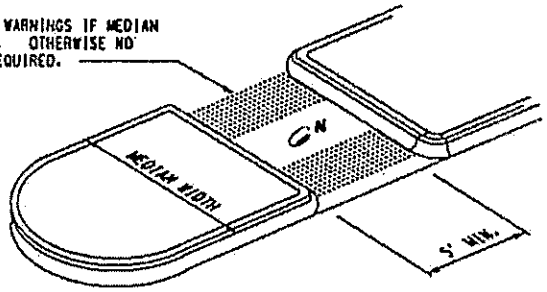

SIDEWALK RAMP TYPE M

(MEDIAN ISLAND)

MICHIGAN DEPARTMENT OF TRANSPORTATION

BUREAU OF HIGHWAY DEVELOPMENT STANDARD PLAN FOR

SIDEWALK RAMP AND DETECTABLE WARNING DETAILS

9-30-2014	7-1-2014	R-28-I	SHEET
F.H.W.A. APPROVAL	PLAN DATE		3 OF 7

* MAXIMUM TURNING SPACE SLOPE IS 2.0% IN EACH DIRECTION OF TRAVEL. MINIMUM DIMENSIONS 5' x 5'. SEE NOTES.

** MAXIMUM RAMP CROSS SLOPE IS 2.0%. RUNNING SLOPE 5% - 7% (8.3% MAXIMUM). SEE NOTES.

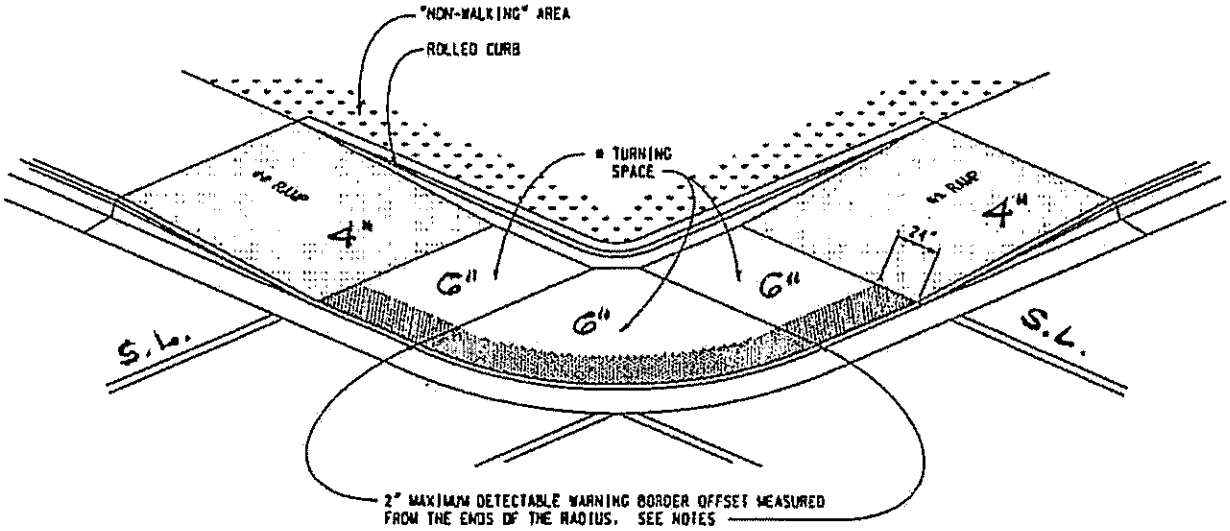

(RADIAL DETECTABLE WARNING SHOWN)

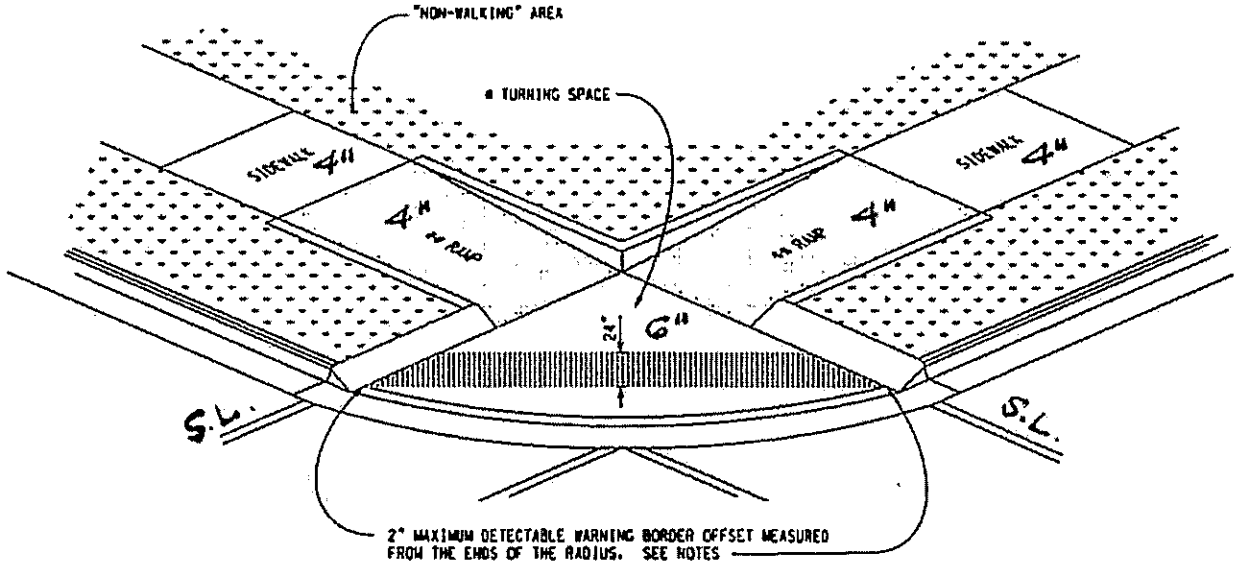

(TANGENT DETECTABLE WARNING SHOWN)

SIDEWALK RAMP TYPE D

(DEPRESSED CORNER)

USE ONLY WHEN INDEPENDENT DIRECTIONAL RAMPS CAN NOT BE CONSTRUCTED FOR EACH CROSSING DIRECTION

MICHIGAN DEPARTMENT OF TRANSPORTATION
BUREAU OF HIGHWAY DEVELOPMENT STANDARD PLAN FOR

SIDEWALK RAMP AND DETECTABLE WARNING DETAILS

9-30-2014	7-1-2014	R-28-I	SHEET
F.H.W.A. APPROVAL	PLAN DATE		4 OF 7

* THE DETECTABLE WARNING SURFACE SHALL BE LOCATED SO THAT THE EDGE NEAREST THE RAIL CROSSING IS 6' MINIMUM AND 15' MAXIMUM FROM THE CENTERLINE OF THE NEAREST RAIL. DO NOT PLACE DETECTABLE WARNING ON RAILROAD CROSSING MATERIAL.

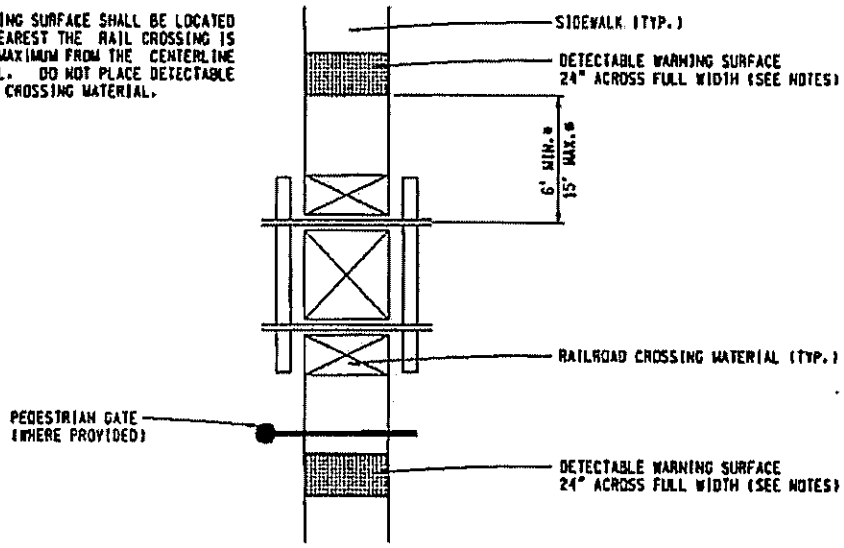

DETECTABLE WARNING AT RAILROAD CROSSING

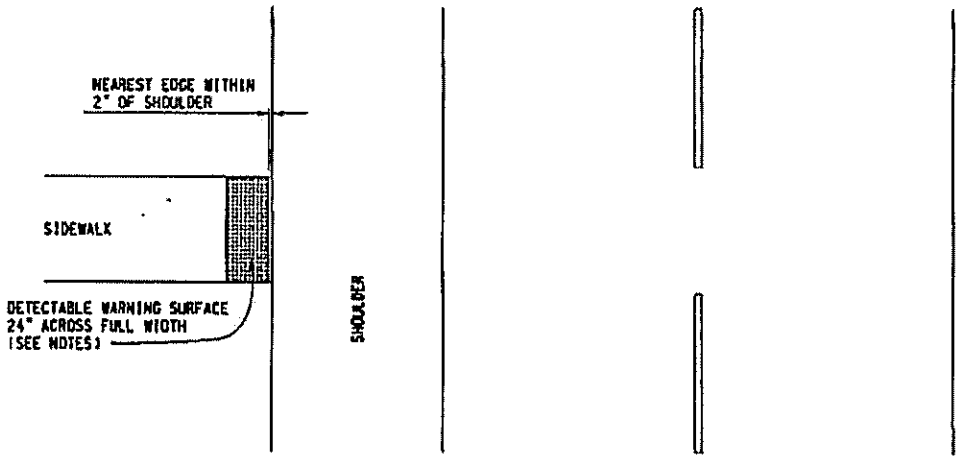

DETECTABLE WARNING AT FLUSH SHOULDER OR ROADWAY

MICHIGAN DEPARTMENT OF TRANSPORTATION
BUREAU OF HIGHWAY DEVELOPMENT STANDARD PLAN FOR

SIDEWALK RAMP AND DETECTABLE WARNING DETAILS

9-30-2014 F.H.W.A. APPROVAL	7-1-2014 PLAN DATE	R-28-I	SHEET 5 OF 7

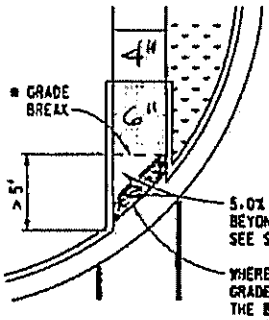

SIDEWALK RAMP LOCATED IN RADIUS (TYPE R SHOWN)
(GRADE BREAK GREATER THAN 5')

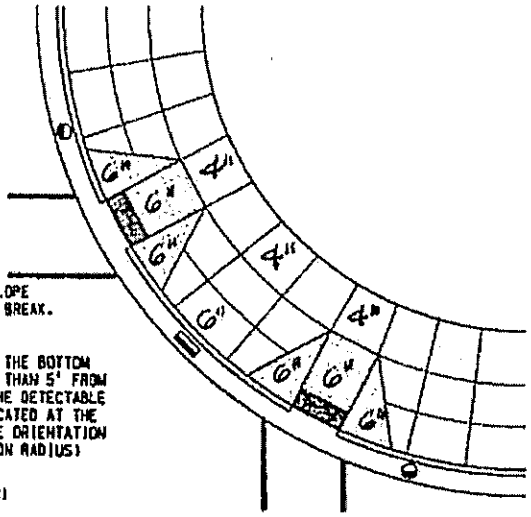

SIDEWALK RAMP PERPENDICULAR TO RADIAL CURB (TYPE F SHOWN)

(USE WITH RADIAL CURB WHEN THE CROSSWALK AND SIDEWALK RAMP ARE NOT ALIGNED)

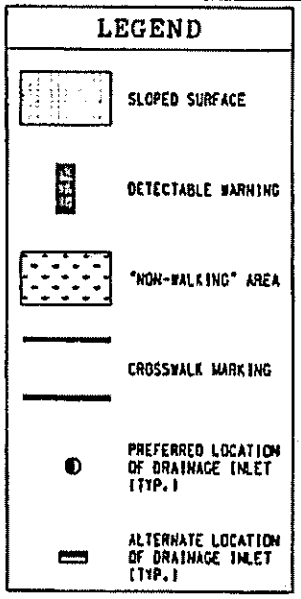

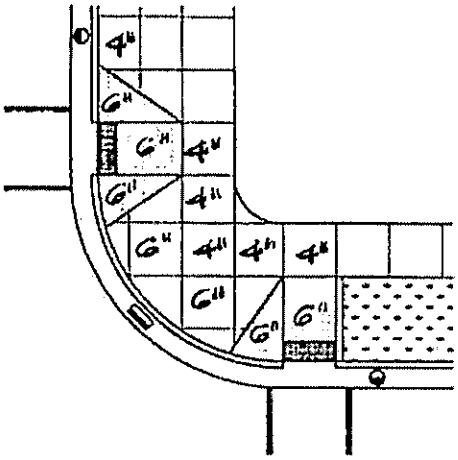

SIDEWALK RAMP PERPENDICULAR TO TANGENT CURB
(TYPE F AND TYPE RF SHOWN)

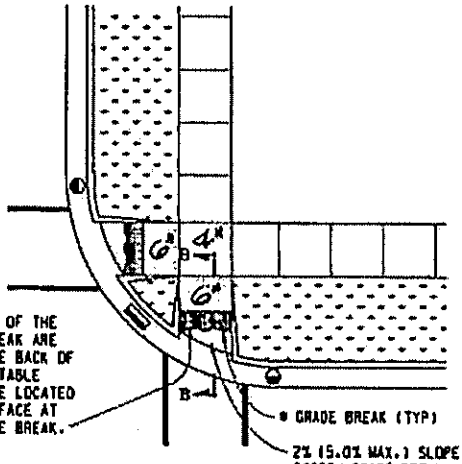

SIDEWALK RAMP LOCATED IN RADIUS (TYPE R SHOWN)
(GRADE BREAK LESS THAN 5')

* GRADE BREAKS AT THE TOP AND BOTTOM OF CURB RAMPS SHALL BE PERPENDICULAR TO THE DIRECTION OF TRAVEL.

*** TRANSITION ADJACENT GUTTER PAN CROSS SECTION TO PROVIDE 5.0% MAXIMUM COUNTER SLOPE ACROSS THE RAMP OPENING.

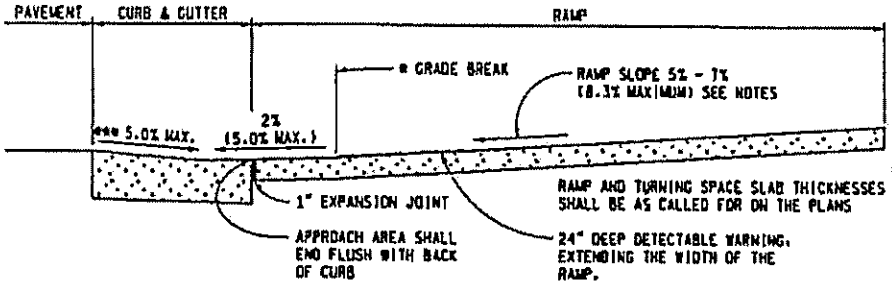

SECTION B-B

SIDEWALK RAMP ORIENTATION

MICHIGAN DEPARTMENT OF TRANSPORTATION
BUREAU OF HIGHWAY DEVELOPMENT STANDARD PLAN FOR

SIDEWALK RAMP AND DETECTABLE WARNING DETAILS

9-30-2014	7-1-2014	R-28-I	SHEET
F.H.W.A. APPROVAL	PLAN DATE		6 OF 7

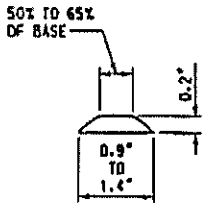

DOME SECTION

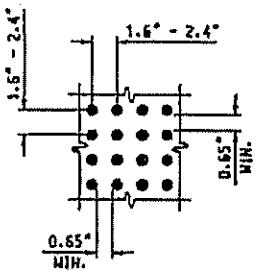

DOME SPACING

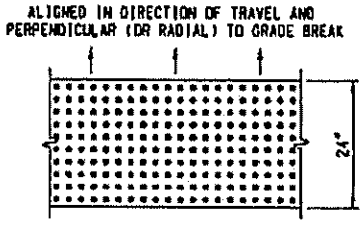

DOME ALIGNMENT

DETECTABLE WARNING DETAILS

NOTES:

DETAILS SPECIFIED ON THIS PLAN APPLY TO ALL CONSTRUCTION, RECONSTRUCTION, OR ALTERATION OF STREETS, CURBS, OR SIDEWALKS IN THE PUBLIC RIGHT OF WAY.

SIDEWALK RAMPS ARE TO BE LOCATED AS SPECIFIED ON THE PLANS OR AS DIRECTED BY THE ENGINEER.

RAMPS SHALL BE PROVIDED AT ALL CORNERS OF AN INTERSECTION WHERE THERE IS EXISTING OR PROPOSED SIDEWALK AND CURB. RAMPS SHALL ALSO BE PROVIDED AT MARKED AND/OR SIGNALIZED MID-BLOCK CROSSINGS.

SURFACE TEXTURE OF THE RAMP SHALL BE THAT OBTAINED BY A COARSE BROOMING, TRANSVERSE TO THE RUNNING SLOPE.

SIDEWALK SHALL BE RAMPED WHERE THE DRIVEWAY CURB IS EXTENDED ACROSS THE WALK.

CARE SHALL BE TAKEN TO ASSURE A UNIFORM GRADE ON THE RAMP, WHERE CONDITIONS PERMIT, IT IS DESIRABLE THAT THE SLOPE OF THE RAMP BE IN ONLY ONE DIRECTION, PARALLEL TO THE DIRECTION OF TRAVEL.

RAMP WIDTH SHALL BE INCREASED, IF NECESSARY, TO ACCOMMODATE SIDEWALK SNOW REMOVAL EQUIPMENT NORMALLY USED BY THE MUNICIPALITY.

PROVIDE TURNING SPACES WHERE PEDESTRIAN TURNING MOVEMENTS ARE REQUIRED.

WHEN 5' MINIMUM WIDTHS ARE NOT FEASIBLE, RAMP WIDTH MAY BE REDUCED TO NOT LESS THAN 4' AND TURNING SPACES TO NOT LESS THAN 4' x 4'.

DETECTABLE WARNING SURFACE COVERAGE IS 24" MINIMUM IN THE DIRECTION OF RAMP/PATH TRAVEL AND THE FULL WIDTH OF THE RAMP/PATH OPENING EXCLUDING CURBED OR FLARED CURB TRANSITION AREAS. A BORDER OFFSET NOT GREATER THAN 2" MEASURED ALONG THE EDGES OF THE DETECTABLE WARNING IS ALLOWABLE. FOR RADIAL CURB THE OFFSET IS MEASURED FROM THE ENDS OF THE RADIUS.

FOR NEW ROADWAY CONSTRUCTION, THE RAMP CROSS SLOPE MAY NOT EXCEED 2.0%. FOR ALTERATIONS TO EXISTING ROADWAYS, THE CROSS SLOPE MAY BE TRANSITIONED TO MEET AN EXISTING ROADWAY GRADE. THE CROSS SLOPE TRANSITION SHALL BE APPLIED UNIFORMLY OVER THE FULL LENGTH OF THE RAMP.

THE MAXIMUM RUNNING SLOPE OF 8.3% IS RELATIVE TO A FLAT (0%) REFERENCE. HOWEVER, IT SHALL NOT REQUIRE ANY RAMP OR SERIES OF RAMPS TO EXCEED 15 FEET IN LENGTH.

DRAINAGE STRUCTURES SHOULD NOT BE PLACED IN LINE WITH RAMPS. THE LOCATION OF THE RAMP SHOULD TAKE PRECEDENCE OVER THE LOCATION OF THE DRAINAGE STRUCTURE. WHERE EXISTING DRAINAGE STRUCTURES ARE LOCATED IN THE RAMP PATH OF TRAVEL, USE A MANUFACTURER'S ADA COMPLIANT GRATE. OPENINGS SHALL NOT BE GREATER THAN ½". ELONGATED OPENINGS SHALL BE PLACED SO THAT THE LONG DIMENSION IS PERPENDICULAR TO THE DOMINANT DIRECTION OF TRAVEL.

TRANSITION THE GUTTER PAN CROSS SECTION SUCH THAT THE COUNTER SLOPE IN THE DIRECTION OF RAMP TRAVEL IS NOT GREATER THAN 5.0%. MAINTAIN THE NORMAL GUTTER PAN CROSS SECTION ACROSS DRAINAGE STRUCTURES.

THE TOP OF THE JOINT FILLER FOR ALL RAMP TYPES SHALL BE FLUSH WITH THE ADJACENT CONCRETE.

CROSSWALK AND STOP LINE MARKINGS, IF USED, SHALL BE SO LOCATED AS TO STOP TRAFFIC SHORT OF RAMP CROSSINGS. SPECIFIC DETAILS FOR MARKING APPLICATIONS ARE GIVEN IN THE "MICHIGAN MANUAL OF UNIFORM TRAFFIC CONTROL DEVICES".

FLARED SIDES WITH A SLOPE OF 10% MAXIMUM, MEASURED ALONG THE ROADSIDE CURB LINE, SHALL BE PROVIDED WHERE AN UNOBSTRUCTED CIRCULATION PATH LATERALLY CROSSES THE SIDEWALK RAMP. FLARED SIDES ARE NOT REQUIRED WHERE THE RAMP IS BORDERED BY LANDSCAPING, UNPAVED SURFACE OR PERMANENT FIXED OBJECTS. WHERE THEY ARE NOT REQUIRED, FLARED SIDES CAN BE CONSIDERED IN ORDER TO AVOID SHARP CURB RETURNS AT RAMP OPENINGS.

DETECTABLE WARNING PLATES MUST BE INSTALLED USING FABRICATED OR FIELD CUT UNITS CAST AND/OR ANCHORED IN THE PAVEMENT TO RESIST SHIFTING OR HEAVING.

MICHIGAN DEPARTMENT OF TRANSPORTATION
BUREAU OF HIGHWAY DEVELOPMENT STANDARD PLAN FOR

SIDEWALK RAMP AND DETECTABLE WARNING DETAILS

9-30-2014	1-1-2014	R-28-I	SHEET
F.H.W.A. APPROVAL	PLAN DATE		1 OF 1

Reported by the Public Health and Safety Committee:

2908182 Bill Snethkamp Lansing Dodge $187,960 POLICE
Submitted in the List and Referred May 12, 2015.

2908497 CORE Technology $67,995.14 POLICE
Submitted in the List and Referred May 19, 2015.

2839582 DPF Cleaning Spec. LTD $0.00 *Ext of Time only* TRANSPORTATION
Submitted in the List and Referred May 19, 2015.

2908864 Empire Equip and Supplies $154,669.17 FIRE
Submitted in the List and Referred May 26, 2015.

2905904 Argus Group Inc. dba Argus Hazco $73,892 POLICE
Submitted in the List and Referred May 26, 2015.

2905959 Fort Wayne Contracting/Ajax Paving Ind. Inc. $3,097,202.52 PUBLIC WORKS
Submitted in the List and Referred May 26, 2015.

2908626 Enterprise Fleet Management $1,104,845.04 POLICE
Submitted in the List and Referred May 19, 2015. Approved with ***WAIVER.***

2908545 Federal Signal Corp $30,000 HOMELAND SECURITYPOLICE
Submitted in the List and Referred June 2, 2015. Approved with ***WAIVER.***

2854372 Willie McCormick and Assoc. Inc. $200,000 PUBLIC WORKS
Submitted in the List and Referred June 2, 2015.

*The following contracts were **REFERRED** on June 9, 2015 to the indicated Standing Committee for consideration and report to the City Council.*

Referred to Budget, Finance and Audit Committee:

No Contracts Referred

Referred to Internal Operations Committee:

2892729 PVS Nolwood Chemicals, Inc GENERAL SERVICES

2898442 W3 Construction Company GENERAL SERVICES

Referred to Neighborhood and Community Services Committee:

2907110	Detroit Building Authority	RECREATION
2907498	ABC Student Transportation	RECREATION

Referred to Planning and Economic Development Committee:

No Contracts Referred

Referred to Public Health and Safety Committee:

2867348, Cont. Incr	Total Armored Car Service	ADMINISTRATIVE HEARINGS
2908512	Chrysler Group Transport	POLICE
87129	Althea L. Simpson	POLICE
87144	Trish L. Stein	POLICE
87251	Lawana Y. Ducker	POLICE
2851840	MD Solutions, Inc.	PUBLIC WORKS
2893445***&Amend***	MD Solutions, Inc.	PUBLIC WORKS
2898333	DPF Cleaning Specialists	TRANSPORTATION

The following are contracts that are currently HELD for review, discussion or report to the Standing Committees.

Internal Operations Committee:

2908230 Butzel Long $82,500 LAW
Submitted in the List and Referred June 2, 2015; Questions to Law.

Public Health and Safety Committee:

87118 Keith Pendell Hutchings (Sr. Parking Manager) $85,575 MUNICIPAL PARK.
Submitted in the List and Referred May 12, 2015; Request justification for services.

2902915 Wolverine Freightliner Eastside $1,492,008 PUBLIC WORKS
Submitted in the List and Referred May 12, 2015; To Law to review Hiring Policy Compliance.

Submitted in the List and Referred May 19, 2015; Reason for Lease.

2905671,Revenue	Fire Recovery USA	$651,690	FIRE

Submitted in the List and Referred May 26, 2015; Justification for fees.

2908726 (QOL)	Bob Maxey Ford	$148,430	FIRE

Submitted in the List and Referred May 26, 2015; Inadequate funds in QOL Cost Center.

2908868 QOL)	Canfield Equipment Service	$115,958.28	FIRE

Submitted in the List and Referred May 26, 2015; Inadequate funds in QOL Cost Center.

Detroit City Council

Legislative Policy Division

TO: Purchasing Division Staff
FROM: Derrick Headd
DATE: June 10, 2015

RE: **PURCHASING ITEMS APPROVED BY THE CITY COUNCIL**

There were no contracts, approved at the June 2, 2015 Session, requested to be Reconsidered.

The following contracts and purchase orders were reported to the City Council by the indicated Standing Committee, at the Regular Session of June 9, 2015 and ***APPROVED***

Reported by the Budget, Finance and Audit Committee:

No Contracts Reported

Reported by the Internal Operations Committee:

2908196 Detroit Diamond Drilling $34,439 GENERAL SERVICES
Submitted in the List and Referred May 26, 2015.

2896016 Astadia, Inc + $274,875to $1,089,350 ITS
Submitted in the List and Referred May 26, 2015. Approved with ***WAIVER.***

86811,Amend2 Karina Odom (Castaneda-Lopez) +672 to $15,280 CITY COUNCIL
Submitted in the List of June 9, 2015; Placed on Consent Agenda; Approved with ***WAIVER.***

86816,Amend2 Joseph F. Rheker III (Leland) +5,001.76 to $71,242.76 CITY COUNCIL
Submitted in the List of June 9, 2015; Placed on Consent Agenda; Approved with ***WAIVER.***

86817,Amend2 Charles Young III (Leland) +15,005.28 to $82,248.56 CITY COUNCIL
Submitted in the List of June 9, 2015; Placed on Consent Agenda; Approved with ***WAIVER.***

87130, Kathryn Molinaro (Castaneda-Lopez) $2,080 CITY COUNCIL
Submitted in the List of June 9, 2015; Placed on Consent Agenda; Approved with ***WAIVER.***

87135 Debra T. Walker (Castaneda-Lopez) $2,760 CITY COUNCIL
Submitted in the List of June 9, 2015; Placed on Consent Agenda; Approved with ***WAIVER.***

87262 Jamayl Martin (Ayers) $2,400 CITY COUNCIL
Submitted in the List of June 2, 2015; Placed on Consent Agenda; Approved with ***WAIVER.***

The following contracts and purchase orders were reported to the City Council by the indicated Standing Committee, at the Regular Session of June 9, 2015 and ***APPROVED***

Reported by the Internal Operations Committee: - *continued*

87274	Monty Heath Jr (Benson)	$2,960	CITY COUNCIL
Submitted in the List of June 2, 2015; Placed on Consent Agenda; Approved with ***WAIVER.***			
87561	Richard Hinton (Ayers)	$2,960	CITY COUNCIL
Submitted in the List of June 2, 2015; Placed on Consent Agenda; Approved with ***WAIVER.***			
87147	Nina Cahill (Castaneda-Lopez)	$4,597.12	CITY COUNCIL
Submitted in the List of June 2, 2015; Placed on Consent Agenda; Approved with ***WAIVER.***			
87136	Caven West	$90,000	ELECTIONS
Submitted in the List of June 9, 2015; Placed on Consent Agenda; Approved with ***WAIVER.***			
87137	Ricky D. Hayes	$35,190	ELECTIONS
Submitted in the List of June 9, 2015; Placed on Consent Agenda; Approved with ***WAIVER.***			
87140	Rashad Harvey	$26,880	ELECTIONS
Submitted in the List of June 9, 2015; Placed on Consent Agenda; Approved with ***WAIVER.***			
87141	Darren Cradieth	$40,000	ELECTIONS
Submitted in the List of June 9, 2015; Placed on Consent Agenda; Approved with ***WAIVER.***			
87142	Debra Angeline Bellant	$40,609	ELECTIONS
Submitted in the List of June 9, 2015; Placed on Consent Agenda; Approved with ***WAIVER.***			

Reported by the Neighborhood and Community Services Committee:

No Contracts Reported

Reported by the Planning and Economic Development Committee:

87098	Rita Ross	$5,912	ZONING
Submitted in the List of June 9, 2015			
87256	Lyall T. Hoggatt	$60,000	ZONING
Submitted in the List of June 9, 2015			

City Council Contract Agenda Items Review Checklist

Reviewer: (purchasing agent sign here) **Date Received:**

Date: **5/12/15** Department **DPW** Division: **City Engineering Division**

Dept Head/Contact Person: **Adrienne D. Smith** Phone No.: **313-224-3950**

Description: **PW-6971 HMA resurfacing & Misc. Construction on Alter, Mack, E. Seven Mile Road, & Harper**

Contract No.: **2905959** PO Type: **CPO** Est. Value: **$3,097,202.52**

Upon FRC Approval (June 22, 2015)

Contract Term (if applicable): **~~From Date on Start Work Notice~~ to December 31, 2017**

Funding: 100% City: Street Fund
(Documentation must be furnished by the Dept. if anything other than City funding)

Recommended Supplier: **Fort Wayne Contracting, Inc/Ajax Paving Industries, Inc., a joint venture**

Required Date: **06/9/2015**

---

1. The business being awarded is **NEW** . If a renewal, provide justification for renewal:_____
2. Was the product or service competitively bid? ☒Yes ☐No
   Attach Copy of Bid Tabulation/Evaluation score sheets as needed
   If the answer to #2 is "NO" explain why there was no competition: _____
3. Was a Co-Operative Agreement Considered? ☐Yes ☒No Co-Operative Name: _____
   If answer to #3 is "No" explain why a Co-Op was not considered: **N/A - Construction**
4. Were savings achieved?
   ☐Yes Amount $_____ ☐No

APR 2 0 2015

Attachment 1

City of Detroit / Human Rights Department
Application of Certification & Re-Certification
Page 18

REQUEST FOR INCOME TAX CLEARANCE

REQUESTING DEPARTMENT / DIVISION: Human Rights Department

E-MAIL ADDRESS: adriennis1@detroitmi.gov

CONTACT NAME: Adrienne Smith PHONE: 313-224-3950 FAX: 313-224-3471

Type of Clearance: ☐ New ☒ Renewal (Please submit 30 days prior to submitting bid or expiration date)

A. To:
City of Detroit
Income Tax Division
Coleman A. Young Municipal Center
2 Woodward Avenue, Suite 1220
Detroit, MI 48226

Phone: (313) 224-3328 or 224-3329
Fax: (313) 224-1741 or 224-4588

For:
Individual or
Company Name Fort Wayne Contracting, Inc.
Address 320 E. Seven Mile Rd.
City Detroit
State MI Zip Code 48203
Telephone 313-368-3400 Fax # 313-368-3406
Email Address pattv@fortwaynecontracting.com

B. Name of Chief Financial Officer/Authorized Contact Person (include address if different from above)
Patty Hopkins

Telephone # 313-368-3400
Fax # 313-368-3406

Employer Identification or Social Security Number
45-0514373

Spouse Social Security Number
N/A

Nature of Contract

BID CONTRACT AMOUNT (if known):
Labor: $ Material: $
Contract # (if known)

C. ALL QUESTIONS MUST BE ANSWERED TO EXPEDITE APPROVAL PROCESS. ANY QUESTION NOT ANSWERED MAY RESULT IN A DENIAL OF INCOME TAX CLEARANCE

Check One: ☒ Individual ☐ Corporation ☐ Partnership ☐ Estate & Trust

INDIVIDUALS ANSWER QUESTIONS 1, 2, 3, 4.

1. Have you filed joint returns with spouse during the last seven (7) years? (If yes, include spouse SSN above) ☐ Yes ☐ No
2. Are you a student and/or claimed as a dependent on someone else's tax return ☐ Yes ☐ No
3. Were you employed during the last seven (7) years? ☒ Yes ☐ No
4. Were you a resident of Detroit during the last seven (7) years? ☐ Yes ☐ No

CORPORATIONS AND PARTNERSHIPS ANSWER QUESTIONS 5, 6, 7.

5. Is the company a new business in Detroit? If yes, attach Employer Registration (Form DSS-4)? ☐ Yes ☒ No
6. Will the company have employees working in Detroit? ☒ Yes ☐ No
7. Will the company use sub-contractors or independent contractors in Detroit? ☐ Yes ☒ No

D. FOR INCOME TAX USE ONLY

Has the employer/employee complied with the provisions of the City Income Tax Ordinance?

☒ Yes ☐ No Signature INCOME TAX INVESTIGATOR Date APR 2 2 2015 Expires APR 2 2 2016
☐ Yes ☐ No Signature Date Expires
☐ Yes ☐ No Signature Date Expires

VISIT OUR WEBSITE FOR INFORMATION AND TAX FORMS AT: www.DetroitMi.gov

Note: An approved Income Tax Certificate may be used in multiple city wide departments that require a bid.

PLEASE ANSWER EVERY QUESTION Updated: 01/15/2015

Vendor Clearance

Supplier Name: AJAX PAVING INDUSTRIES INC

Supplier Number: 20483

Tax Registration: 381383205

Income Tax Clearance

Clearance Status: Approved

Approval / Denial Date: 19-MAR-2015

Clearance Expiration Date: 19-MAR-2016

Save | Exit | Clear

PURCHASING DIVISION
VENDOR CLEARANCE REQUEST

Submit to: Revenue Collections
Purchasing Vendor
1012 Coleman A. Young Municipal Center
Detroit, MI 48226
(313) 224 – 4087 (Telephone)
(313) 224 – 4238 (Fax)

Nature of Contract Bituminous Surface Removal - PW6958
Contract Amount $5,412,460.00

Business Type: (X) Corp ( ) Partnership ( ) Sole Proprietorship ( ) Personal Services

Business Name Fort Wayne Contracting, Inc.

Business Address 320 E. Seven Mile Rd., Detroit, MI 48203

Ward/Item #

F.I.D. NO. 45-0514373

City Personal Property I.D. # 09990378.01

Owner(s) Name Christopher R. Hanore

Owner(s) SS#

Contact Person Patty Hopkins
Phone Number 313-368-3400

Owner(s) Home Address ( ) Lease ( ) Own

Please do not write below this line for department use only.

Real Property	Special Assessment	Personal Property	Other Receivable
( ) Denied	( ) Denied	( ) Denied	( ) Denied
(✓) Approved	(✓) Approved	(✓) Approved	(✓) Approved

Comments:

REVENUE COLLECTIONS
APPROVED
CONTRACT CLEARANCES

Please mail, fax or drop off this Vendor Request Form to the Revenue Collection Unit at the address indicated above. You will responsible for keeping the clearance and submitting a photocopy to Purchasing with your bid package.

Signature (City of Detroit)

DEC 29 2014
Date

AUG 30 2015
Expiration Date

CITY OF DETROIT

ACCOUNTS RECEIVABLE CLEARANCE APPLICATION
2 WOODWARD AVENUE, SUITE 105, COLEMAN A YOUNG MUNICIPAL CENTER
REVENUE COLLECTIONS UNIT (313) 224-4087 / FAX: 224-4238 / RevenueCollections@DetroitMi.gov

☐ SECTION A: BUSINESS LICENSE ☐ BUDGET ☐ CITY COUNCIL ☐ DDOT ☐ DPW ☐ FINANCE ☐ FIRE ☐ HEALTH
HUMAN RIGHTS ☐ LAW ☐ MAYOR ☐ OMBUDSMAN ☐ PLANNING& DEVELOPMENT ☐ POLICE ☐ PURCHASING
RECREATION ☐ WATER & SEWAGE OTHER City Engineering, Dept. of Public Works

ADDRESS OF DEPARTMENT 2 Woodward Ave., 642 CAYMC, Detroit, MI 48226

DATE SENT January 28, 2015 CONTACT PERSON Annette Smith

PHONE NUMBER (313) 224-2389 FAX NUMBER (313) 224-4238 EMAIL smitha@detroitmi.gov

CONTRACT AMOUNT $

☐ SECTION B: CORPORATION LICENSE TYPE

CORPORATION NAME Ajax Paving Industries, Inc.

ADDRESS 830 Kirts Blvd., Suite 100 CITY/STATE/ZIP Troy, MI 48084 ☐ OWN ✓ LEASE

CITY PERSONAL PROPERTY NUMBER None. FID / EIN NUMBER 38-1383205

OTHER CITY-OWNED PROPERTY PARCELS

CONTACT PERSON Gayle Jeffrey PHONE NUMBER 248-244-3339 EMAIL ADDRESS gjeffrey@ajaxpaving.com

☐ SECTION C: PARTNERSHIP LICENSE TYPE

BUSINESS NAME

BUSINESS ADDRESS CITY/STATE/ZIP ☐ OWN ☐ LEASE

CITY PERSONAL PROPERTY NUMBER FID / EIN NUMBER

A: PARTNER'S NAME PHONE NUMBER

HOME ADDRESS CITY/STATE/ZIP ☐ OWN ☐ LEASE

DRIVER'S LICENSE # OTHER CITY-OWNED PROPERTY PARCELS

B. PARTNER'S NAME PHONE NUMBER

HOME ADDRESS CITY/STATE/ZIP ☐ OWN ☐ LEASE

DRIVER'S LICENSE # OTHER CITY-OWNED PROPERTY PARCELS

CONTACT PERSON PHONE NUMBER EMAIL ADDRESS

☐ SECTION D: SOLE PROPRIETORSHIP LICENSE TYPE

BUSINESS NAME

BUSINESS ADDRESS CITY/STATE/ZIP ☐ OWN ☐ LEASE

CITY PERSONAL PROPERTY NUMBER FID / EIN NUMBER

OWNER'S NAME DRIVER'S LICENSE # PHONE NUMBER

HOME ADDRESS CITY/STATE/ZIP ☐ OWN ☐ LEASE

OTHER CITY-OWNED PROPERTY PARCELS

EMAIL ADDRESS

☐ SECTION E: PERSONAL SERVICES

NAME ADDDRESS ☐ OWN ☐ LEASE

CITY/STATE/ZIP

PHONE NUMBER DRIVER LICENSE #

OTHER PROPERTY ADDRESSES OWNED IN WITHIN DETROIT

SOCIAL SECURITY NUMBER EMAIL ADDRESS

REVENUE COLLECTIONS APPROVED CONTRACT CLEARANCES

FOR TREASURY COLLECTION USE ONLY

☐ APPROVED ☐ DENIED ☐ DENIED WITH ATTACHMENTS

SIGNATURE Annette Smith DATE JAN 28 2015 CLEARANCE VALID UNTIL AUG 30 2015

REVISED 7/12/2012

COVENANT OF EQUAL OPPORTUNITY

(Application for Clearance – Terms Enforced After Contract is Awarded)

I, being a duly authorized representative of **Fort Wayne Contracting, Inc./Ajax Paving Industries, Inc., a joint venture**, (hereinafter "Contractor"), am hereby authorized to enter into a Covenant of Equal Opportunity, (hereinafter "Covenant") with the City of Detroit, (hereinafter "City"); obligating the Contractor and all sub-contractors, not to discriminate against any employee or applicant for employment, training, education, or apprenticeship connected directly or indirectly with the performance of the contract, with respect to his/her hire, promotion, job assignment, tenure, terms, conditions or privileges of employment because of race, color, religious beliefs, public benefit status, national origin, age, marital status, disability, sex, sexual orientation, or gender identity or expression; except as otherwise exempted under City Code, Ordinance No. 27-2-12.

Contractor will ensure that the City of Detroit Human Rights Department shall receive notification of all potential sub-contractors and a copy of their Covenant prior to the commencement of work on any City of Detroit contract. Contractor further agrees that the City of Detroit reserves the right to require additional information prior to, during and at any time after the Covenant is fully executed.

Furthermore, Contractor agrees that this Covenant is valid for the life of the contract and/or for a specified period of time as indicated below and that a breach of this Covenant shall be deemed a material breach of contract and be subject to damages pursuant to City Code, Ordinance No. 27-3-2, Section (e).

RFQ / PO No. (If applicable) **PW-6971, CPO# 2905959**

Duration of Covenant: Date on Start Work Notice **to** December 31, 2017

Printed Name of Contractor/Organization: (Type or Print Legibly) **Fort Wayne Contracting, Inc./Ajax Paving Industries, Inc., a joint venture**

Contractor Address: 320 E. Seven Mile Rd., Detroit, MI 48203
(Address to include City, State, Zip)

Contractor Phone/E-mail: 313-368-3400 (Phone) patty@fortwaynecontracting.com (E-mail)

Printed Name & Title of Authorized Representative: Christopher R. Honore-President of Fort Wayne Contracting, Inc.

Signature of Authorized Representative: Christopher R. Honore

Date: 04/27/2015

***** This document MUST be notarized *****

Signature of Notary: Patricia Hopkins

Printed Name of Seal of Notary: Patricia Hopkins

My Commission Expires: 02 / 18 / 2019

PATRICIA HOPKINS
Notary Public - Michigan
Macomb County
My Commission Expires Feb 18, 2019
Acting in the County of Wayne

FOR CONTRACTING DEPARTMENT USE ONLY:

Date Rec'd: 4 / 28 / 15 **Received By:** A W Smith **Title:** Admin Assist III

Please fax a COPY of the notarized Covenant and Award Letter to the Human Rights Department 313-224-3434

ACORD®

CERTIFICATE OF LIABILITY INSURANCE

DATE (MM/DD/YYYY): 4/22/2015

THIS CERTIFICATE IS ISSUED AS A MATTER OF INFORMATION ONLY AND CONFERS NO RIGHTS UPON THE CERTIFICATE HOLDER. THIS CERTIFICATE DOES NOT AFFIRMATIVELY OR NEGATIVELY AMEND, EXTEND OR ALTER THE COVERAGE AFFORDED BY THE POLICIES BELOW. THIS CERTIFICATE OF INSURANCE DOES NOT CONSTITUTE A CONTRACT BETWEEN THE ISSUING INSURER(S), AUTHORIZED REPRESENTATIVE OR PRODUCER, AND THE CERTIFICATE HOLDER.

IMPORTANT: If the certificate holder is an ADDITIONAL INSURED, the policy(ies) must be endorsed. If SUBROGATION IS WAIVED, subject to the terms and conditions of the policy, certain policies may require an endorsement. A statement on this certificate does not confer rights to the certificate holder in lieu of such endorsement(s).

PRODUCER
Guy Hurley Blaser and Heuer, LLC
1080 Kirts Blvd., Suite 500
Troy MI 48084

CONTACT NAME: Mary Ellen Krakauer
PHONE (A/C, No, Ext): (248) 519-1430 FAX (A/C, No): (248) 519-1401
E-MAIL ADDRESS: mkrakauer@ghbh.com

INSURER(S) AFFORDING COVERAGE	NAIC #
INSURER A: Amerisure Mutual Ins. Co. AX	23396
INSURER B:	
INSURER C:	
INSURER D:	
INSURER E:	
INSURER F:	

INSURED
Fort Wayne Contracting, Inc.
320 E. Seven Mile Road
Detroit MI 48203

COVERAGES CERTIFICATE NUMBER: 14-15 GL Master REVISION NUMBER:

THIS IS TO CERTIFY THAT THE POLICIES OF INSURANCE LISTED BELOW HAVE BEEN ISSUED TO THE INSURED NAMED ABOVE FOR THE POLICY PERIOD INDICATED. NOTWITHSTANDING ANY REQUIREMENT, TERM OR CONDITION OF ANY CONTRACT OR OTHER DOCUMENT WITH RESPECT TO WHICH THIS CERTIFICATE MAY BE ISSUED OR MAY PERTAIN, THE INSURANCE AFFORDED BY THE POLICIES DESCRIBED HEREIN IS SUBJECT TO ALL THE TERMS, EXCLUSIONS AND CONDITIONS OF SUCH POLICIES. LIMITS SHOWN MAY HAVE BEEN REDUCED BY PAID CLAIMS.

INSR LTR	TYPE OF INSURANCE	ADDL INSR	SUBR WVD	POLICY NUMBER	POLICY EFF (MM/DD/YYYY)	POLICY EXP (MM/DD/YYYY)	LIMITS	
A	GENERAL LIABILITY X COMMERCIAL GENERAL LIABILITY CLAIMS-MADE X OCCUR X CONTRACTUAL LIABILITY X XCU COVERAGE INCLUDED GEN'L AGGREGATE LIMIT APPLIES PER: POLICY X PRO-JECT LOC	X		2062046	5/28/2014	5/28/2015	EACH OCCURRENCE DAMAGE TO RENTED PREMISES (Ea occurrence) MED EXP (Any one person) PERSONAL & ADV INJURY GENERAL AGGREGATE PRODUCTS - COMP/OP AGG	$ 1,000,000 $ 1,000,000 $ 5,000 $ 1,000,000 $ 2,000,000 $ 2,000,000 $
A	AUTOMOBILE LIABILITY X ANY AUTO ALL OWNED AUTOS SCHEDULED AUTOS HIRED AUTOS NON-OWNED AUTOS			2062047	5/28/2014	5/28/2015	COMBINED SINGLE LIMIT (Ea accident) BODILY INJURY (Per person) BODILY INJURY (Per accident) PROPERTY DAMAGE (Per accident) PIP-Basic	$ 1,000,000 $ $ $ $
A	X UMBRELLA LIAB X OCCUR EXCESS LIAB CLAIMS-MADE DED X RETENTION $ 0			2062048	5/28/2014	5/28/2015	EACH OCCURRENCE AGGREGATE 	$ 4,000,000 $ 4,000,000 $
A	WORKERS COMPENSATION AND EMPLOYERS' LIABILITY ANY PROPRIETOR/PARTNER/EXECUTIVE OFFICER/MEMBER EXCLUDED? Y/N (Mandatory in NH) If yes, describe under DESCRIPTION OF OPERATIONS below	N/A		WC2087627	5/28/2014	5/28/2015	X WC STATU-TORY LIMITS OTH-ER E.L. EACH ACCIDENT E.L. DISEASE - EA EMPLOYEE E.L. DISEASE - POLICY LIMIT	 $ 500,000 $ 500,000 $ 500,000

DESCRIPTION OF OPERATIONS / LOCATIONS / VEHICLES (Attach ACORD 101, Additional Remarks Schedule, if more space is required)
Project: PW6971. HMA Resurfacing & Miscellanious Construction City of Detroit is Additional Insured for General Liability when required by written contract. 30 Day Notice of Cancellation (Except Non-Payment of Premium) applies in favor of the City of Detroit for General Liability when required by written contract.

CERTIFICATE HOLDER

City of Detroit
Finance Department, Accounts Payable
1006 Coleman A. Young
Municipal Center
Detroit, MI 48226

CANCELLATION

SHOULD ANY OF THE ABOVE DESCRIBED POLICIES BE CANCELLED BEFORE THE EXPIRATION DATE THEREOF, NOTICE WILL BE DELIVERED IN ACCORDANCE WITH THE POLICY PROVISIONS.

AUTHORIZED REPRESENTATIVE
Paul Hurley/WEAL

© 1988-2010 ACORD CORPORATION. All rights reserved.
The ACORD name and logo are registered marks of ACORD

ACORD®

CERTIFICATE OF LIABILITY INSURANCE

DATE (MM/DD/YYYY) 5/8/2015

THIS CERTIFICATE IS ISSUED AS A MATTER OF INFORMATION ONLY AND CONFERS NO RIGHTS UPON THE CERTIFICATE HOLDER. THIS CERTIFICATE DOES NOT AFFIRMATIVELY OR NEGATIVELY AMEND, EXTEND OR ALTER THE COVERAGE AFFORDED BY THE POLICIES BELOW. THIS CERTIFICATE OF INSURANCE DOES NOT CONSTITUTE A CONTRACT BETWEEN THE ISSUING INSURER(S), AUTHORIZED REPRESENTATIVE OR PRODUCER, AND THE CERTIFICATE HOLDER.

IMPORTANT: If the certificate holder is an ADDITIONAL INSURED, the policy(ies) must be endorsed. If SUBROGATION IS WAIVED, subject to the terms and conditions of the policy, certain policies may require an endorsement. A statement on this certificate does not confer rights to the certificate holder in lieu of such endorsement(s).

PRODUCER
Guy Hurley Blaser and Heuer, LLC
1080 Kirts Blvd., Suite 500
Troy MI 48084

CONTACT NAME: Donna Griffiths
PHONE (A/C, No, Ext): (248) 519-1439 FAX (A/C, No): (248) 519-1401
E-MAIL ADDRESS: dgriffiths@ghbh.com

INSURER(S) AFFORDING COVERAGE	NAIC #
INSURER A: The Travelers Indemnity Co A+XV	25658
INSURER B: Houston Casualty Co. A+XIV	42374
INSURER C: ACIG Insurance Company AVIII	19984
INSURER D: Travelers Prop Cas Co. A+XV	25674
INSURER E:	
INSURER F:	

INSURED
Ajax Paving Industries, Inc.
830 Kirts Blvd., Suite 100
Troy MI 48084

COVERAGES **CERTIFICATE NUMBER:** 14-15 Master **REVISION NUMBER:**

THIS IS TO CERTIFY THAT THE POLICIES OF INSURANCE LISTED BELOW HAVE BEEN ISSUED TO THE INSURED NAMED ABOVE FOR THE POLICY PERIOD INDICATED. NOTWITHSTANDING ANY REQUIREMENT, TERM OR CONDITION OF ANY CONTRACT OR OTHER DOCUMENT WITH RESPECT TO WHICH THIS CERTIFICATE MAY BE ISSUED OR MAY PERTAIN, THE INSURANCE AFFORDED BY THE POLICIES DESCRIBED HEREIN IS SUBJECT TO ALL THE TERMS, EXCLUSIONS AND CONDITIONS OF SUCH POLICIES. LIMITS SHOWN MAY HAVE BEEN REDUCED BY PAID CLAIMS.

INSR LTR	TYPE OF INSURANCE	ADDL INSR	SUBR WVD	POLICY NUMBER	POLICY EFF (MM/DD/YYYY)	POLICY EXP (MM/DD/YYYY)	LIMITS	
A	GENERAL LIABILITY X COMMERCIAL GENERAL LIABILITY CLAIMS-MADE X OCCUR X XCU COVERAGE INCLUDED X CONTRACTUAL LIABILITY GEN'L AGGREGATE LIMIT APPLIES PER: POLICY X PRO-JECT LOC	X		CO-8A09732-9-IND-14	6/1/2014	6/1/2015	EACH OCCURRENCE DAMAGE TO RENTED PREMISES (Ea occurrence) MED EXP (Any one person) PERSONAL & ADV INJURY GENERAL AGGREGATE PRODUCTS - COMP/OP AGG	$ 1,000,000 $ 300,000 $ 5,000 $ 1,000,000 $ 2,000,000 $ 2,000,000 $
A	AUTOMOBILE LIABILITY X ANY AUTO ALL OWNED AUTOS SCHEDULED AUTOS HIRED AUTOS NON-OWNED AUTOS			CAP-8A09733-0-IND-14	6/1/2014	6/1/2015	COMBINED SINGLE LIMIT (Ea accident) BODILY INJURY (Per person) BODILY INJURY (Per accident) PROPERTY DAMAGE (Per accident) PIP-Basic	$ 1,000,000 $ $ $ $
B	X UMBRELLA LIAB X OCCUR EXCESS LIAB CLAIMS-MADE DED RETENTION $			H143XC5013202	6/1/2014	6/1/2015	EACH OCCURRENCE AGGREGATE	$ 5,000,000 $ 5,000,000 $
C	WORKERS COMPENSATION AND EMPLOYERS' LIABILITY ANY PROPRIETOR/PARTNER/EXECUTIVE OFFICER/MEMBER EXCLUDED? (Mandatory in NH) Y/N X If yes, describe under DESCRIPTION OF OPERATIONS below	N/A		WCA000004714	6/1/2014	6/1/2015	X WC STATU-TORY LIMITS OTH-ER E.L. EACH ACCIDENT E.L. DISEASE - EA EMPLOYEE E.L. DISEASE - POLICY LIMIT	 $ 1,000,000 $ 1,000,000 $ 1,000,000
D	INLAND MARINE			QT-630-8A099243-TIL-14	6/1/2014	6/1/2015	LEASED/RENTED EQUIP	$550,000

DESCRIPTION OF OPERATIONS / LOCATIONS / VEHICLES (Attach ACORD 101, Additional Remarks Schedule, if more space is required)
Project: PW6971. HMA Resurfacing & Miscellanious Construction. The City of Detroit is an Additional Insuredfor General Liability when required by written contract. 30 Day Notice of Cancellation (Except Non-Payment of Premium) applies in favor of the City of Detroit for General Liability when required by written contract.

CERTIFICATE HOLDER

City of Detroit
Finance Department, Accounts Payable
1006 Coleman A. Young
Municipal Center
Detroit, MI 48226

CANCELLATION

SHOULD ANY OF THE ABOVE DESCRIBED POLICIES BE CANCELLED BEFORE THE EXPIRATION DATE THEREOF, NOTICE WILL BE DELIVERED IN ACCORDANCE WITH THE POLICY PROVISIONS.

AUTHORIZED REPRESENTATIVE
Robert Heuer/WEAL Robert D. Heuer

© 1988-2010 ACORD CORPORATION. All rights reserved.
The ACORD name and logo are registered marks of ACORD

ACORD®

CERTIFICATE OF LIABILITY INSURANCE

DATE (MM/DD/YYYY) 4/22/2015

THIS CERTIFICATE IS ISSUED AS A MATTER OF INFORMATION ONLY AND CONFERS NO RIGHTS UPON THE CERTIFICATE HOLDER. THIS CERTIFICATE DOES NOT AFFIRMATIVELY OR NEGATIVELY AMEND, EXTEND OR ALTER THE COVERAGE AFFORDED BY THE POLICIES BELOW. THIS CERTIFICATE OF INSURANCE DOES NOT CONSTITUTE A CONTRACT BETWEEN THE ISSUING INSURER(S), AUTHORIZED REPRESENTATIVE OR PRODUCER, AND THE CERTIFICATE HOLDER.

IMPORTANT: If the certificate holder is an ADDITIONAL INSURED, the policy(ies) must be endorsed. If SUBROGATION IS WAIVED, subject to the terms and conditions of the policy, certain policies may require an endorsement. A statement on this certificate does not confer rights to the certificate holder in lieu of such endorsement(s).

PRODUCER
Guy Hurley Blaser and Heuer, LLC
1080 Kirts Blvd., Suite 500
Troy MI 48084

CONTACT NAME: Mary Ellen Krakauer
PHONE (A/C, No, Ext): (248) 519-1430 FAX (A/C, No): (248) 519-1401
E-MAIL ADDRESS: mkrakauer@ghbh.com

INSURER(S) AFFORDING COVERAGE	NAIC #
INSURER A: Amerisure Mutual Ins. Co. AX	23396
INSURER B:	
INSURER C:	
INSURER D:	
INSURER E:	
INSURER F:	

INSURED
Fort Wayne Contracting, Inc.
320 E. Seven Mile Road
Detroit MI 48203

COVERAGES **CERTIFICATE NUMBER:** 14-15 GL Master **REVISION NUMBER:**

THIS IS TO CERTIFY THAT THE POLICIES OF INSURANCE LISTED BELOW HAVE BEEN ISSUED TO THE INSURED NAMED ABOVE FOR THE POLICY PERIOD INDICATED. NOTWITHSTANDING ANY REQUIREMENT, TERM OR CONDITION OF ANY CONTRACT OR OTHER DOCUMENT WITH RESPECT TO WHICH THIS CERTIFICATE MAY BE ISSUED OR MAY PERTAIN, THE INSURANCE AFFORDED BY THE POLICIES DESCRIBED HEREIN IS SUBJECT TO ALL THE TERMS, EXCLUSIONS AND CONDITIONS OF SUCH POLICIES. LIMITS SHOWN MAY HAVE BEEN REDUCED BY PAID CLAIMS.

INSR LTR	TYPE OF INSURANCE	ADDL INSR	SUBR WVD	POLICY NUMBER	POLICY EFF (MM/DD/YYYY)	POLICY EXP (MM/DD/YYYY)	LIMITS	
A	GENERAL LIABILITY X COMMERCIAL GENERAL LIABILITY CLAIMS-MADE X OCCUR X CONTRACTUAL LIABILITY X XCU COVERAGE INCLUDED GEN'L AGGREGATE LIMIT APPLIES PER: POLICY X PRO-JECT LOC	X		2062046	5/28/2014	5/28/2015	EACH OCCURRENCE DAMAGE TO RENTED PREMISES (Ea occurrence) MED EXP (Any one person) PERSONAL & ADV INJURY GENERAL AGGREGATE PRODUCTS - COMP/OP AGG	$ 1,000,000 $ 1,000,000 $ 5,000 $ 1,000,000 $ 2,000,000 $ 2,000,000 $
A	AUTOMOBILE LIABILITY X ANY AUTO ALL OWNED AUTOS SCHEDULED AUTOS HIRED AUTOS NON-OWNED AUTOS			2062047	5/28/2014	5/28/2015	COMBINED SINGLE LIMIT (Ea accident) BODILY INJURY (Per person) BODILY INJURY (Per accident) PROPERTY DAMAGE (Per accident) PIP-Basic	$ 1,000,000 $ $ $ $
A	X UMBRELLA LIAB X OCCUR EXCESS LIAB CLAIMS-MADE DED X RETENTION $ 0			2062048	5/28/2014	5/28/2015	EACH OCCURRENCE AGGREGATE	$ 4,000,000 $ 4,000,000 $
A	WORKERS COMPENSATION AND EMPLOYERS' LIABILITY ANY PROPRIETOR/PARTNER/EXECUTIVE OFFICER/MEMBER EXCLUDED? (Mandatory in NH) Y/N If yes, describe under DESCRIPTION OF OPERATIONS below	N/A		WC2087627	5/28/2014	5/28/2015	X WC STATU-TORY LIMITS OTH-ER E.L. EACH ACCIDENT E.L. DISEASE - EA EMPLOYEE E.L. DISEASE - POLICY LIMIT	 $ 500,000 $ 500,000 $ 500,000

DESCRIPTION OF OPERATIONS / LOCATIONS / VEHICLES (Attach ACORD 101, Additional Remarks Schedule, if more space is required)
Project: PW6971. HMA Resurfacing & Miscellanious Construction City of Detroit is Additional Insured for General Liability when required by written contract. 30 Day Notice of Cancellation (Except Non-Payment of Premium) applies in favor of the City of Detroit for General Liability when required by written contract.

CERTIFICATE HOLDER

City of Detroit
Finance Department, Accounts Payable
1006 Coleman A. Young
Municipal Center
Detroit, MI 48226

CANCELLATION

SHOULD ANY OF THE ABOVE DESCRIBED POLICIES BE CANCELLED BEFORE THE EXPIRATION DATE THEREOF, NOTICE WILL BE DELIVERED IN ACCORDANCE WITH THE POLICY PROVISIONS.

AUTHORIZED REPRESENTATIVE
Paul Hurley/WEAL

© 1988-2010 ACORD CORPORATION. All rights reserved.
The ACORD name and logo are registered marks of ACORD

ACORD®

CERTIFICATE OF LIABILITY INSURANCE

DATE (MM/DD/YYYY) 5/8/2015

THIS CERTIFICATE IS ISSUED AS A MATTER OF INFORMATION ONLY AND CONFERS NO RIGHTS UPON THE CERTIFICATE HOLDER. THIS CERTIFICATE DOES NOT AFFIRMATIVELY OR NEGATIVELY AMEND, EXTEND OR ALTER THE COVERAGE AFFORDED BY THE POLICIES BELOW. THIS CERTIFICATE OF INSURANCE DOES NOT CONSTITUTE A CONTRACT BETWEEN THE ISSUING INSURER(S), AUTHORIZED REPRESENTATIVE OR PRODUCER, AND THE CERTIFICATE HOLDER.

IMPORTANT: If the certificate holder is an ADDITIONAL INSURED, the policy(ies) must be endorsed. If SUBROGATION IS WAIVED, subject to the terms and conditions of the policy, certain policies may require an endorsement. A statement on this certificate does not confer rights to the certificate holder in lieu of such endorsement(s).

PRODUCER
Guy Hurley Blaser and Heuer, LLC
1080 Kirts Blvd., Suite 500
Troy MI 48084

CONTACT NAME: Donna Griffiths
PHONE (A/C, No, Ext): (248) 519-1439 FAX (A/C, No): (248) 519-1401
E-MAIL ADDRESS: dgriffiths@ghbh.com

INSURER(S) AFFORDING COVERAGE	NAIC #
INSURER A: The Travelers Indemnity Co A+XV	25658
INSURER B: Houston Casualty Co. A+XIV	42374
INSURER C: ACIG Insurance Company AVIII	19984
INSURER D: Travelers Prop Cas Co. A+XV	25674
INSURER E:	
INSURER F:	

INSURED
Ajax Paving Industries, Inc.
830 Kirts Blvd., Suite 100
Troy MI 48084

COVERAGES **CERTIFICATE NUMBER:** 14-15 Master **REVISION NUMBER:**

THIS IS TO CERTIFY THAT THE POLICIES OF INSURANCE LISTED BELOW HAVE BEEN ISSUED TO THE INSURED NAMED ABOVE FOR THE POLICY PERIOD INDICATED. NOTWITHSTANDING ANY REQUIREMENT, TERM OR CONDITION OF ANY CONTRACT OR OTHER DOCUMENT WITH RESPECT TO WHICH THIS CERTIFICATE MAY BE ISSUED OR MAY PERTAIN, THE INSURANCE AFFORDED BY THE POLICIES DESCRIBED HEREIN IS SUBJECT TO ALL THE TERMS, EXCLUSIONS AND CONDITIONS OF SUCH POLICIES. LIMITS SHOWN MAY HAVE BEEN REDUCED BY PAID CLAIMS.

INSR LTR	TYPE OF INSURANCE	ADDL INSR	SUBR WVD	POLICY NUMBER	POLICY EFF (MM/DD/YYYY)	POLICY EXP (MM/DD/YYYY)	LIMITS	
A	GENERAL LIABILITY X COMMERCIAL GENERAL LIABILITY CLAIMS-MADE X OCCUR X XCU COVERAGE INCLUDED X CONTRACTUAL LIABILITY GEN'L AGGREGATE LIMIT APPLIES PER: POLICY X PRO-JECT LOC	X		CO-8A09732-9-IND-14	6/1/2014	6/1/2015	EACH OCCURRENCE DAMAGE TO RENTED PREMISES (Ea occurrence) MED EXP (Any one person) PERSONAL & ADV INJURY GENERAL AGGREGATE PRODUCTS - COMP/OP AGG $	$ 1,000,000 $ 300,000 $ 5,000 $ 1,000,000 $ 2,000,000 $ 2,000,000 $
A	AUTOMOBILE LIABILITY X ANY AUTO ALL OWNED AUTOS SCHEDULED AUTOS HIRED AUTOS NON-OWNED AUTOS			CAP-8A09733-0-IND-14	6/1/2014	6/1/2015	COMBINED SINGLE LIMIT (Ea accident) BODILY INJURY (Per person) BODILY INJURY (Per accident) PROPERTY DAMAGE (Per accident) PIP-Basic	$ 1,000,000 $ $ $ $
B	X UMBRELLA LIAB X OCCUR EXCESS LIAB CLAIMS-MADE DED RETENTION $			H143XC5013202	6/1/2014	6/1/2015	EACH OCCURRENCE AGGREGATE $	$ 5,000,000 $ 5,000,000 $
C	WORKERS COMPENSATION AND EMPLOYERS' LIABILITY ANY PROPRIETOR/PARTNER/EXECUTIVE OFFICER/MEMBER EXCLUDED? (Mandatory in NH) Y/N X If yes, describe under DESCRIPTION OF OPERATIONS below	N/A		WCA000004714	6/1/2014	6/1/2015	X WC STATU-TORY LIMITS OTH-ER E.L. EACH ACCIDENT E.L. DISEASE - EA EMPLOYEE E.L. DISEASE - POLICY LIMIT	 $ 1,000,000 $ 1,000,000 $ 1,000,000
D	INLAND MARINE			QT-630-8A099243-TIL-14	6/1/2014	6/1/2015	LEASED/RENTED EQUIP	$550,000

DESCRIPTION OF OPERATIONS / LOCATIONS / VEHICLES (Attach ACORD 101, Additional Remarks Schedule, if more space is required)
Project: PW6971. HMA Resurfacing & Miscellanious Construction. The City of Detroit is an Additional Insuredfor General Liability when required by written contract. 30 Day Notice of Cancellation (Except Non-Payment of Premium) applies in favor of the City of Detroit for General Liability when required by written contract.

CERTIFICATE HOLDER

City of Detroit
Finance Department, Accounts Payable
1006 Coleman A. Young
Municipal Center
Detroit, MI 48226

CANCELLATION

SHOULD ANY OF THE ABOVE DESCRIBED POLICIES BE CANCELLED BEFORE THE EXPIRATION DATE THEREOF, NOTICE WILL BE DELIVERED IN ACCORDANCE WITH THE POLICY PROVISIONS.

AUTHORIZED REPRESENTATIVE

Robert Heuer/WEAL Robert D. Heuer

© 1988-2010 ACORD CORPORATION. All rights reserved.
INS025 (201005) 01 The ACORD name and logo are registered marks of ACORD

PW-6971 CPO# 2905959

Hiring Policy Compliance Affidavit

I, Christopher R. Hence, Being duly sworn, state that I am the President of Fort Wayne Contracting of Fort Wayne Contracting, Inc. / Ajax Paving Industries, Inc., Joint Venture
Title Name of Bidder Corp or Other Business Entity

and that I have reviewed the hiring policies of this employer. I affirm that these policies are in compliance with the requirements of Article V, Division 6 of the Detroit City Code of 1984, being Sections 18-5-81 through 18-5-86 thereof. I further affirm that this employer will not inquire or consider the criminal convictions of applicants for employment needed to fulfill the terms of any City contract that may result from the competitive procedure in connection with which this affidavit is submitted, until such times as the employer interviews the applicant or determines that the applicant is qualified.

In support of this affidavit, **I attach a copy of the application form** that will be used to hire employees needed to fulfill the terms of any City contract that may result from the competitive procedure in connection with which this affidavit is submitted.

SIGNED,

Christopher R. Hence

Title: President **Date:** 4/8/15
of Fort Wayne Contracting, Inc

STATE OF Michigan)
) SS
COUNTY OF Macomb)

The foregoing Affidavit was acknowledged before me the 8th day of April, 2015,
By Christopher R. Hence

Notary Public, County of: Macomb

Patricia Hopkins
Signature of Notary

State of: Michigan

My commission expires: 2/18/2019

PATRICIA HOPKINS
Notary Public - Michigan
Macomb County
My Commission Expires Feb 18, 2019
Acting in the County of Wayne

APPLICATION FOR EMPLOYMENT

We consider applications for all positions without regard to race, color, religion, creed, sex, national origin, disability, sexual orientation, citizenship status or any other legally protected status.

Position(s) Applied For | Date of Application

How Did You Learn About Us?

☐ Advertisement ☐ Relative ☐ Inquiry
☐ Employment Agency ☐ Friend ☐ Other _____

Last Name | First Name | Middle Name

Address *Number* *Street* *City* *State* *Zip Code*

Telephone Number(s) | Social Security Number (Voluntary)

Best time to contact you at home is: ____:____ AM PM

If you are under 18 years of age, can you provide required proof of your eligibility to work? ☐ Yes ☐ No

Have you ever filed an application with us before? ..... ☐ Yes ☐ No

If Yes, give date _____

Have you ever been employed with us before? ..... ☐ Yes ☐ No

If Yes, give date _____

Do any of your friends or relatives, other than spouse, work here? ..... ☐ Yes ☐ No

Are you currently employed? ..... ☐ Yes ☐ No

May we contact your present employer? ..... ☐ Yes ☐ No

Are you prevented from lawfully becoming employed in this country because of Visa or Immigration Status ..... ☐ Yes ☐ No

Proof of citizenship or immigration status will be required upon employment.

Date available for work ___/___/___ What is your desired salary range? _____

Are you available to work:
☐ Full-Time (please indicate 1 2 3 shift)
☐ Part-Time (please indicate Mornings Afternoon Evenings)
☐ Temporary (please indicate dates available ___/___/___ - ___/___/___)

Are you currently on "lay-off" status and subject to recall? ..... ☐ Yes ☐ No

Can you travel if a job requires it? ..... ☐ Yes ☐ No

A criminal record does not constitute an automatic bar to employment and will be considered only as it relates to the job in question.

WE ARE AN EQUAL OPPORTUNITY EMPLOYER

EMPLOYMENT EXPERIENCE

Start with your present or last job. Include any job-related military service assignments and volunteer activities. You may exclude organizations which indicate race, color, religion, gender, national origin, disabilities or other protected status.

1.

Employer		Dates Employed From	Dates Employed To	Work Performed
Address				
Telephone Number(s)		Hourly Rate/Salary Starting	Hourly Rate/Salary Final	
Job Title	Supervisor			
Reason for Leaving				

2.

Employer		Dates Employed From	Dates Employed To	Work Performed
Address				
Telephone Number(s)		Hourly Rate/Salary Starting	Hourly Rate/Salary Final	
Job Title	Supervisor			
Reason for Leaving				

3.

Employer		Dates Employed From	Dates Employed To	Work Performed
Address				
Telephone Number(s)		Hourly Rate/Salary Starting	Hourly Rate/Salary Final	
Job Title	Supervisor			
Reason for Leaving				

4.

Employer		Dates Employed From	Dates Employed To	Work Performed
Address				
Telephone Number(s)		Hourly Rate/Salary Starting	Hourly Rate/Salary Final	
Job Title	Supervisor			
Reason for Leaving				

If you need additional space, please continue on a separate sheet of paper.

List professional, trade, business or civic activities and offices held.

You may exclude membership which would reveal gender, race, religion, national origin, age, ancestry, disability or other protected status:

APPLICANT'S STATEMENT

I certify that answers given herein are true and complete.

I authorize investigation of all statements contained in this application for employment as may be necessary in arriving at an employment decision.

This application for employment shall be considered active for a period of time not to exceed 45 days. Any applicant wishing to be considered for employment beyond this time period should inquire as to whether or not applications are being accepted at that time.

I hereby understand and acknowledge that, unless otherwise defined by applicable law, any employment relationship with this organization is of an *"at will"* nature, which means that the Employee may resign at any time and the Employer may discharge Employee at any time with or without cause. It is further understood that this *"at will"* employment relationship may not be changed by any written document or by conduct unless such change is specifically acknowledged in writing by an authorized executive of this organization.

In the event of employment, I understand that false or misleading information given in my application or interview(s) may result in discharge. I understand, also, that I am required to abide by all rules and regulations of the employer.

_____ _____

Signature of Applicant Date

FOR PERSONNEL DEPARTMENT USE ONLY

Arrange Interview ☐ Yes ☐ No

Remarks _____

_____ _____

INTERVIEWER DATE

Employed ☐ Yes ☐ No Date of Employment _____

Job Title _____ Hourly Rate/ Salary _____ Department _____

By _____

NAME AND TITLE DATE

This Application For Employment is sold for general use throughout the United States. Amsterdam Printing and Litho assumes no responsibility for the use of said form or any questions which, when asked by the employer of the job applicant, may violate State and/or Federal Law.

SLAVERY ERA RECORDS AND INSURANCE DISCLOSURE ORDINANCE

CITY OF DETROIT

SLAVERY ERA RECORD AND INSURANCE DISCLOSURE AFFIDAVIT

1. Name of Contractor: Fort Wayne Contracting, Inc.

2. Address of Contractor: 320 E. Seven Mile Rd.
Detroit, MI 48203

3. Name of Predecessor Entities (if any): NA

4. Prior Affidavit submission? ____ No X Yes, on: 2/12/15 (Date of prior submission)

If "No", complete Items 5 and 6.
If "Yes", list date of prior submission above, go to Item 6 and execute this Affidavit.

5. ___ Contractor was established in _____ (year) and did not exist during the slavery era in the United States, is not a successor in interest to any entity that existed during such time, and therefore has no relevant records to search, or any pertinent information to disclose.

___ Contractor has searched their records and those of any predecessor entity, and has found no records that they or any predecessor(s) made any investments in, or derived profits from the slave industry or from slaveholder insurance policies.

___ Contractor has found records that they or their predecessor(s) made investments in, or derived profits from, the slave industry or slaveholder insurance policies. The nature of the investment, profits, or insurance policies, including the names of any slaves or slaveholders, is disclosed in the attached document(s).

6. I declare that the representations made in this Affidavit are accurate to the best of my knowledge and are based upon a diligent search of records in the Contractor's possession or knowledge. All documentation attached to this Affidavit reflects full disclosure of all records that are required to be disclosed to the City of Detroit. I also acknowledge that any failure to conduct a diligent search, or to make a full and complete disclosure, shall render this contract voidable by the City of Detroit.

Christopher R. Hanna (Printed Name) President (Title)

[signature] (Signature) 4/8/15 (Date)

Subscribed and sworn to before me this 8th day of April 2015
Patricia Hopkins
Notary Public, Macomb County, Michigan
My Commission expires: 2/18/2019

PATRICIA HOPKINS
Notary Public - Michigan
Macomb County
My Commission Expires Feb 18, 2019
Acting in the County of Lenawee

CPO:2905959

SLAVERY ERA RECORDS AND INSURANCE DISCLOSURE ORDINANCE

CITY OF DETROIT
SLAVERY ERA RECORD AND INSURANCE DISCLOSURE AFFIDAVIT

1. Name of Contractor: Airek Paving Industries, Inc.

2. Address of Contractor: 830 Kirts Blvd, Ste 100
Troy, MI

3. Name of Predecessor Entities (if any): NA

4. Prior Affidavit submission? ____ No X Yes, on: 2/2/15
(Date of prior submission)

If "No", complete Items 5 and 6.
If "Yes", list date of prior submission above, go to Item 6 and execute this Affidavit.

5. ___ Contractor was established in _____ (year) and did not exist during the slavery era in the United States, is not a successor in interest to any entity that existed during such time, and therefore has no relevant records to search, or any pertinent information to disclose.

___ Contractor has searched their records and those of any predecessor entity, and has found no records that they or any predecessor(s) made any investments in, or derived profits from the slave industry or from slaveholder insurance policies.

___ Contractor has found records that they or their predecessor(s) made investments in, or derived profits from, the slave industry or slaveholder insurance policies. The nature of the investment, profits, or insurance policies, including the names of any slaves or slaveholders, is disclosed in the attached document(s).

6. I declare that the representations made in this Affidavit are accurate to the best of my knowledge and are based upon a diligent search of records in the Contractor's possession or knowledge. All documentation attached to this Affidavit reflects full disclosure of all records that are required to be disclosed to the City of Detroit. I also acknowledge that any failure to conduct a diligent search, or to make a full and complete disclosure, shall render this contract voidable by the City of Detroit.

Robert Fagan (Printed Name) Estimating Manager (Title)

(Signature) 4/8/15 (Date)

Subscribed and sworn to before me this
8th day of April 2015
Judy Marie Filipiak
Notary Public, Macomb County, Michigan
My Commission expires: 11/3/2016

JUDY MARIE FILIPIAK
Notary Public, State of Michigan
County of Macomb
My Commission Expires Nov. 03, 2016
Acting in the County of Macomb

CPO:2905959

View assistance for Search Results

Search Results

Current Search Terms: ajax* paving*

Your search for "ajax* Paving*" returned the following results...

Notice: This printed document represents only the first page of your SAM search results. More results may be available. To print your complete search results, you can download the PDF and print it.

Entity **AJAX PAVING INDUSTRIES, INC.** Status: **Active**

DUNS: 005812276 **CAGE Code: 1Y2S1** View Details

Has Active Exclusion?: No **DoDAAC:**

Expiration Date: 02/06/2016 **Delinquent Federal Debt? No**

Purpose of Registration: All Awards

Glossary

Search Results

Entity

Exclusion

Search Filters

By Record Status

By Functional Area - Entity Management

By Functional Area - Performance Information

SAM | System for Award Management 1.0

IBM v1.P.27.20150327-1711

Note to all Users: This is a Federal Government computer system. Use of this system constitutes consent to monitoring at all times.

View assistance for Search Results

Search Results

Current Search Terms: fT WAYNE* contracting*

Notice: This printed document represents only the first page of your SAM search results. More results may be available. To print your complete search results, you can download the PDF and print it.

No records found for current search.

Glossary

Search Results

Entity

Exclusion

Search Filters

By Record Status

By Functional Area - Entity Management

By Functional Area - Performance Information

SAM | System for Award Management 1.0

IBM v1.P.27.20150327-1711

Note to all Users: This is a Federal Government computer system. Use of this system constitutes consent to monitoring at all times.

CONTRACT NO: **PW-6971**
CPO# 2905959

DEPARTMENT: **DPW-City Engineering Div.** **[X] WAIVER**
AGENDA DATE: _____

CONTRACT SYNOPSIS

CONTRACTOR'S NAME:	**Fort Wayne Contracting, Inc/Ajax Paving Industries, Inc., a joint venture**
CONTRACTOR'S ADDRESS:	**320 E. Seven Mile Road** **Detroit, MI 48203-2022**
WHAT FORM OF COMPETITION DID THE DEPARTMENT ENGAGE IN TO OBTAIN THIS PROFESSIONAL SERVICES CONTRACT:	**Request For Proposal (RFP)** **3 bids received 4/9/15, Sole bid** **If there was no competition obtained, explain why: N/A**
PROJECT:	**PW-6971 HMA Resurfacing & Miscellaneous Construction on Alter, Mack, E 7 Mile Rd & Harper**
TYPE OF FUNDING AND %:	**100% City (Street Fund)**
CONTRACT AMOUNT:	**Estimated Total -$3,097,202.52**
CONTRACT PERIOD:	**Upon issuance of Start Work Notice until December 31, 2017**
ADVANCE PAYMENT:	
BRIEF DESCRIPTION:	**PW-6971 HMA Resurfacing & Miscellaneous Construction on Alter, Mack, E 7 Mile Rd & Harper, Lowest total bid, 100% City, STREET FUND, 11% below Engineer's Estimate, 65 items, unit prices range from $0.01/each to $231,025.00/lump sum**
REASON FOR DELAY:	**N/A**

Clearances:

Income Tax	Revenue Collection	HRD-Covenant
Ft. Wayne Expires: 4/22/16 **Ajax Expires: 3/19/16**	**Ft. Wayne Expires: 8/30/15** **Ajax Expires: 8/30/15**	**Signed: 4/27/15**

Prevailing Wage and Fringe Benefit Rates Required for City Projects Ordinance Contractor Certification

By signature in the space provided below, the Contractor acknowledges receipt of a copy of Ordinance No. 01-04, which is entitled Prevailing Wage and Fringe Benefit Rates Required for City Project and codified at Sections 18-5-60 through 18-5-69 of the 1984 Detroit City Code ("Ordinance"), a copy of which is attached to and made a part of this contract and affirms that it will comply with this Ordinance in all respects.

The Contractor affirms that prevailing wages, as established from time to time by the State of Michigan, shall be paid by the Contractor and all subcontractors under the terms of the Contract and for the duration of the Contract.

Company Name: Fort Wayne Contracting, Inc.

Authorized Signature: [signature] Date: 4/8/15

Print Name: Christopher B. House

Title: President

CPO# 2905959

Prevailing Wage and Fringe Benefit Rates Required for City Projects Ordinance Contractor Certification

By signature in the space provided below, the Contractor acknowledges receipt of a copy of Ordinance No. 01-04, which is entitled Prevailing Wage and Fringe Benefit Rates Required for City Project and codified at Sections 18-5-60 through 18-5-69 of the 1984 Detroit City Code ("Ordinance"), a copy of which is attached to and made a part of this contract and affirms that it will comply with this Ordinance in all respects.

The Contractor affirms that prevailing wages, as established from time to time by the State of Michigan, shall be paid by the Contractor and all subcontractors under the terms of the Contract and for the duration of the Contract.

Company Name: Ajax Paving Industries, Inc

Authorized Signature: Robert Farina Date: 4/8/15

Print Name: Robert Farina

Title: Estimating Manager

CPO# 2905959

Council Agenda - **Week of June 9, 2015**

CPO NO. 2905959
SPO NO. 2905960
PW–6971

DATE: **May 12, 2015**
TO: **Bianca Washington, Purchasing Division**
FROM: **Adrienne D. Smith, DPW -City Engineering Division**
RE: **PW – 6971 HMA resurfacing & Misc. Construction on Alter, Mack, E. Seven Mile Road, & Harper**

Fort Wayne Contracting, Inc/Ajax Paving Industries, Inc.,
a joint venture
320 E. Seven Mile Road
Detroit, MI 48203-2022
$3,097,202.52

Attached are the following clearances for the above captioned contract:

			Ft. Wayne	Ajax
1.	Income Tax	**Expires:**	**4/22/16**	**3/19/16**
2.	Revenue Collection	**Expires:**	**8/30/15**	**8/30/15**
3.	Human Rights Affidavit	**Signed:**	**4/27/15**	
4.	Contract Synopsis			
5.	Insurance Certificate			
6.	Prevailing Wage Ordinance Contractor Certification			
7.	Slavery Era Record & Insurance Disclosure Affidavit			
8.	Hiring Policy Compliance Affidavit			

Also attached are:

1. Recommendation to Award (referral)
2. Bid Tab
3. Contract Transmittal (Copy)
4. Letter from contractor holding bid price **N/A**
5. Mailing List

Three (3) Executed Contracts were submitted to Budget for approvals and signatures **5/12/15**.
They should be in Purchasing in time for this agenda date.

PLEASE PLACE THIS CONTRACT ON THE REQUESTED COUNCIL AGENDA WITH A WAIVER OF RECONSIDERATION.

Please contact me if there are any questions or problems - **224-3950**

COMMENTS:

THANK YOU!!!

C:pw6971\agendareqftajaxjv

CITY OF DETROIT
DEPARTMENT OF PUBLIC WORKS
CITY ENGINEERING DIVISION

COLEMAN A. YOUNG MUNICIPAL CENTER
2 WOODWARD AVENUE, SUITE 601
DETROIT, MICHIGAN 48226
PHONE: 313 • 224 • 3949
FAX: 313 • 224 • 3471
www.detroitmi.gov

Referral Form

PW-6971
CPO NO: 2905959
SPO NO: 2905960

Attached is a tabulation of the **three (3)** bids received, opened and read in the Purchasing Division on **April 9, 2015.**

The low bid by **Fort Wayne Contracting, Inc./Ajax Paving Industries, Inc., a joint venture** was regular in all respects and is in accordance with the contract documents.

The City Engineering Division of the Department of Public Works recommends that the contract be awarded to **Fort Wayne Contracting, Inc./Ajax Paving Industries, Inc., a joint venture** in the amount of **$3,097,202.52** which is **11%** below the Engineer's Estimate. It is also recommended that the Department of Public Works execute this contract on behalf of the City of Detroit.

Recommended by: _____ **Date:** 4-30-15
City Engineer

Approved by: _____ **Date:** 5-4-15
Director,
Department of Public Works

pw6971recommendation

CITY OF DETROIT BUDGET DEPARTMENT
CONTRACT TRANSMITTAL SHEET

DEPARTMENT:	**Public Works**	**LOG # 5428**
CONTRACT:	**2905959**	**DATE RECEIVED: 5/12/2015**
NAME:	**Fort Wayne Contracting/Ajax Paving Industries, Inc.**	**CHANGE ORDER#: 000**
ADDRESS:	**Detroit, MI**	**AMOUNT: $3,097,202.52**
PURPOSE:	**PW-6971 HMA Street Resurfacing and Miscellaneous Construction on Alter, Mack, E. Seven Mile Road and Harper. A joint venture project.**	

RECOMMENDATION

_____ **Date Up Front**

__X__ **APPROVE**

_____ **DENY**

MANAGEMENT
_____**APPROVAL DATE:**

DATE COMPLETED __May 13, 2015__

ANALYST __Valeria Wiggins__

DATE RELEASED _____

MANAGEMENT COD _____

Please use space below to explain delay over five days.

Contract Summary: The contract provisions consist of approximately 5.0 miles of cold milling HMA surface, HMA resurfacing, concrete curb, sidewalk, curb ramps, HMA approaches, drainage structure adjustments, pavement markings and other miscellaneous construction on Alter between Chandler Park & E. Jefferson, Cadieux between Chandler Park & Morang, Mack between 1-75 & Riopelle, E. Seven Mile Road between I-75 & Conant, and Harper between Cadieux & I-94 Crossover. PW-6971 includes approximately 65 punch items with unit process ranging from $0.01 each to $231,025.00 lump sum costs.

Account String: 3301-193871-000048-632100-04189-000000-A4570 – FA= $15,997,044.91

Original Contract: $3,097,202.52
Contract Period: 2 Years and 7 months (June 1, 2015 – December 31, 2017)
FY 2014/15 (June 1, 2015 – June 30, 2015) $99,909.76
FY 2015/16 (July 1, 2015 – June 30, 2016) $1,198,917.10
FY 2016/17 (July 1, 2016 – June 30, 2017) $1,198,917.10
FY 2017/18 (July 1, 2017 – December 31, 2017) $599,458.56

Note: All clearances are valid, liability insurance coverage is current, the City acknowledgement, signature pages, and performance bond documentation are included.

PW-6971
5.0 Miles HMA Resurfacing

Company Name	E-Mail Address
Al's Asphalt Dave Coppola or Ed Swanson alsasphalt.com	dave@alsasphalt.com
Asphalt Specialist, Inc Paul Ducat	pducat@asipaving.com
Audia Construction	raudia@audiaconstructioninc.com
CAM	galbraith@cam-online.com
Century Cement Co	centurycement@sbcglobal.net
Dan's Excavating	estimating@dansexc.com ljurda@dansexc.com
DiPonio Contracting Cliff Rhodes	crhodes@diponiocontracting.com
Dodge Data & Analytics	justin.miller@construction.com
Giorgi Concrete, LLC	mgiorgi@giorgiconcrete.com udebrabant@giorgiconcrete.com anthony@giorgiconcrete.com
Hart & Associates, LLC Tiffany Hart	hartandassociates@yahoo.com
Iafrate	hhowlett@iafrate.com
Lacaria Construction Co	sal@lacariaconcrete.com
Major Cement Co	michael@majorcementco.com frank@majorcementco.com
Proline Asphalt Michael	michael@prolineasphalt.com
Superior Asphalt	john@superioraspphalt.com andy@superioraspphalt.com